CONTRACT DOCUMENTS
AND
SPECIFICATIONS

WTC No. 51582

OCTOBER, 2017

CITY OF PECOS, TEXAS

WASTEWATER LAGOON UPGRADE

WTC
405 SW 1st Street ▪ Andrews, TX 79714 ▪ (432) 523-2181
Texas Registered Engineering Firm F-2746 ▪ Texas Registered Surveyor Firm #10079200

CITY OF PECOS, TEXAS

WASTEWATER LAGOON UPGRADE

OCTOBER, 2017

WTC No. 51582

STATE OF TEXAS
JAMES CHAD TOMPKINS
93839
LICENSED
PROFESSIONAL ENGINEER

_____ Date: 10/17/17
James C. Tompkins, P.E.

WTC
405 SW 1st Street ▪ Andrews, TX 79714 ▪ (432) 523-2181
Texas Registered Engineering Firm F-2746 ▪ Texas Registered Surveyor Firm #10079200

TABLE OF CONTENTS

BID DOCUMENTS:

Notice to Bidders
Instructions to Bidders
Information for Bidders
Bid Proposal
Bid Bond

CONTRACT DOCUMENTS:

Contract
Payment Bond
Performance Bond
Insurance Requirements
Affidavit and Guarantee
General Contract Conditions

SPECIFICATIONS:

Project Electrical
Trenching, Embedment and Backfill for Water, Sewer, Drainage and Other Pipelines
Trench Safety System
General Site Filling and Grading
Earthwork for Structures
Pressure Piping
Concrete for Structures
Reinforcing Steel
Crystalline Concrete Waterproofing
Flexible Base
Gravity Flow Piping and Appurtenances
Metal Fabrication
Mobilization

SPECIAL SPECIFICATIONS:

Flexible Membrane Liner Specification Modification Sheet
Flexible Membrane Liner
Stainless Steel Slide Gates
Miscellaneous Mechanical Equipment

APPENDIX:

TCEQ Sanitary Sewer General Construction Notes
TCEQ Water Distribution System General Construction Notes

BID DOCUMENTS

NOTICE TO BIDDERS

Sealed bid proposals addressed to City of Pecos will be received for furnishing all necessary materials, machinery, equipment, superintendence, and labor, and doing all work for construction of:

WASTEWATER LAGOON UPGRADE
PECOS, TEXAS

in accordance with the plans and specifications on file with Town of Pecos City.

The scope of work will include WASTEWATER LAGOON UPGRADE, and related appurtenances in Pecos, Texas. Bids will be received until December 7, 2017 at 2:00 PM at City Hall, 110 East 6th Street, Pecos, Texas 79772. Bids will be publicly opened at same location at 2:00 PM on December 7, 2017. Bids received after the time and date listed above, set for submissions, will be returned unopened.

Bidders are expected to inspect the sites of the work and to inform themselves regarding all local conditions and legislation concerning the wage rate and the payment of prevailing wage.

Plans, specifications, proposals, and contract forms will be available on October 23, 2017, and may be seen and examined at the office of West Texas Consultants, Inc., 405 S.W. lst Street, Andrews, Texas. Hard copies may be obtained by depositing a non-refundable fee of $250.00 with the Engineer for each set. An electronic PDF version will be available on *www.civcastusa.com* beginning October 23, 2017 at no cost to the Contractor. However, each Contractor must register and acknowledge that they have received a copy of the Plans, Specifications, and Contract Documents for the project, and sign into the Bidder's List.

Each bidder will be required to submit with his bid a certified check, cashier's check or bid bond, in the amount of five (5) percent of the total of the bid submitted, made payable to TOWN OF PECOS CITY as a bid guarantee that bidder will enter into contract and execute bond and work guaranty in the forms provided within ten (10) days after notice of award of contract. Bids without the required check or bid bond will not be considered.

The OWNER reserves the right to reject any or all bids, to waive all technicalities and to accept the proposals/bids they deem to be in their best interest.

TOWN OF PECOS CITY
P.O. BOX 929
PECOS, TEXAS 79772

BY: Nichols
SYRA NICHOLS– CITY SECRETARY

Dates to be published: October 21 and October 28

INSTRUCTIONS TO BIDDERS

1. Bid Documents

The full bid document package, including the Bid Proposal, Bid Bond, Notice to Bidders, Instructions to Bidders, and the Information for Bidders shall be sealed in an envelope and clearly labeled with: 1) The words **"CITY OF PECOS, WASTEWATER LAGOON UPGRADE PROJECT BID DOCUMENTS"**, 2) Name and Address of Bidder, and 3) Date and Time of the Bid Opening. NO FAXED OR ELECTRONIC COPIES OF THE BID DOCUMENTS WILL BE ACCEPTED.

a. All bids must be submitted on the final forms provided and are subject to all requirements of the Contract Documents, including the Contract, General Conditions, Plans and Specifications.

b. All bids must be regular in every respect and no interlineations, excisions or special conditions may be made or included by the bidder.

c. The locality may consider as irregular any bid on which there is an alteration of or departure from the bid form and, at its option, may reject any irregular bid.

d. Bidders are required to thoroughly familiarize themselves with all of the provisions of the Contract Documents. They are further required to inspect the Site of the Work and inform themselves of all conditions affecting the execution of the Work to be performed. The filing of the bid shall constitute an admission by the bidder that he has carried out the foregoing stipulations to his entire satisfaction. Quantities included in the plan and Bid Form are estimated and are to be regarded as approximate only. The Owner reserves the right to vary the quantities, to construct all or any part, or to delete any part or item of the Work which may be deemed advisable.

2. Bid Bond

a. Bid bond in the amount of 5% of the bid issued by an acceptable surety shall be submitted with each bid. A certified check or bank draft payable to CITY OF PECOS may be submitted in lieu of the Bid Bond.

b. The bid bond or its comparable will be available for pickup by the unsuccessful bidders as soon as practical after the opening of the bids or will be destroyed within one month of the bid opening.

3. Bid Guarantee Period

All bid offers will remain effective for a period of 30 Days. The Contractor must hold all unit and total costs bid to do the work throughout that time period, unless changes are mutually considered and approved in writing by both parties and made part of the construction contract.

4. Venue

The final Agreement shall be governed and construed in accordance with the individual substantive laws of the State of Texas. The parties to the Agreement acknowledge that the project and subject matter of this Agreement is in Reeves County. Exclusive venue shall be in Reeves County for any lawsuit or claim arising under, or in any way connected to, this project or Agreement.

5. Requests for Information & Electronic Communications

If any person contemplating submitting a bid for this contract is in doubt as to the true meaning of the specifications, or other bid documents or any part thereof, he may submit to the Engineer a Request for Information (RFI). All RFI's by Contractors during the bidding process must be submitted to the Engineer by typed, electronic means. Bidders should submit all RFI's via the CivCast USA website page

set up for this project at www.civcastusa.com (WASTEWATER LAGOON UPGRADE PROJECT)

No oral interpretations will be made to any bidder. Each RFI shall be made in writing to the engineer no less than seven (7) days prior to the bid opening. Each interpretation made will be in the form of an Addendum to the contract documents and will be distributed to all parties holding contract documents no less than five (5) days prior to the bid opening. It is, however, the bidder's responsibility to make inquiry as to any addenda issued. All such addenda shall become part of the contract documents and all bidders shall be bound by such addenda, whether or not received by the bidders. A copy of such Addendum will be issued on CivCast.

6. Inspection of Site

Each bidder should visit the site of the proposed work and fully acquaint himself with the existing conditions there and should fully inform himself as to the facilities involved, the difficulties and restrictions attending the performance of the contract. The bidder should thoroughly examine and familiarize himself with the drawings, technical specifications and all other contract documents. The contractor by the execution of the contract shall in no way be relieved of any obligation under it due to his failure to receive or examine any form or legal document or to visit the site or acquaint himself with the conditions there existing. The owner will be justified in rejecting any claim based on lack of inspection of the site prior to the bid.

7. Alternate bid items

No alternate bids or bid items will be considered unless they are specifically requested within the Contract Documents or by the Plans & Specifications.

8. Additional Bidding Instructions

a) All applicable blank spaces in the Bid Form shall be filled in.

The signature shall be in longhand. Any interlineation, alteration or erasure must be initialed by the signer of the Bid. Bidder shall make no stipulations on the Bid Form nor qualify his bid in any manner. In case of ambiguity, or lack of clearness in stating prices in the bid, the Owner reserves the right to adopt the most advantageous construction thereof.

Bid forms must be completed in ink. In the case of a conflict between the unit price indicated and the extended amount shown, the unit price indicated multiplied by the stated quantity shall govern.

Each copy of the Bid shall include the legal name of Bidder and a statement whether Bidder is a sole proprietor, a partnership, corporation, or any other legal entity, and each copy shall be signed by the person or persons legally authorized to bind the Bidder to a contract. A bid by a corporation shall further give the State of incorporation and have a corporate seal affixed. A bid submitted by an agent shall have a current Power of Attorney attached certifying agent's authority to bid.

b) Interest in Owner Contracts Prohibited: No officer or employee of the Owner shall have a financial interest, direct or indirect, in any contract with the Owner or shall be financially interested, directly or indirectly, in the sales to the Owner of any land, materials, supplies or service, except on behalf of the Owner as an officer or employee. This prohibition extends to City and County boards and commissions other than those which are purely advisory.

c) ***Bidders are required*** to submit a list of similar type projects (that will reflect previous project experience) that they have performed over the last five years. This list needs to include the name of the project that they worked on, the Owner's name and contact information, and the basic scope of work of the completed project. The table below provides an example of how you could prepare your list; it is not a required format.

Project Experience List with Similar Type Projects within the Last Five Years

Project	Owner	Contact Information	Scope

1. ABC Project	ABC, Inc.	John Doe 432-555-5555	Roadway reconstruction
2. DEF Project	DEF, Inc.	Jane Doe 432-555-5555	Roadway reconstruction

d) ***Bidders are required*** to submit resumes of key project personnel (Project Manager and Superintendent/Lead Forman).

e) All bidders on this project must submit with their bids documentation to demonstrate that the Contractor is qualified by experience and capability to successfully construct the project within the Contract Time and for the Contract Amount. Include the following information:
   a. **Qualifications and experience of the Bidders, including key personnel to be assigned to the project.**
   b. **Qualifications of manufacturers proposed to furnish the principal items of material or equipment**
   c. **Financial data consisting of audited financial statements for the last five years may be requested.**
   d. **Previous relevant experience and present contracts.**

f) Each Bidder agrees to waive any claim it has or may have against the Owner, the Engineer, and their respective employees, arising out of or in connection with the administration, evaluation, or recommendation of any bid.

9. Time for Receiving Bids

Bids received prior to the advertised hour of opening shall be kept securely sealed. The officer appointed to open the bids shall decide when the specified time has arrived and no bid received thereafter will be considered.

10. Opening of Bids

The owner shall, at the time and place fixed for the opening of bids, open each bid and publicly read it aloud, irrespective of any irregularities therein. Bidders and other interested individuals may be present.

11. Award of Contract/Rejection of Bids

The Owner reserves the right to consider as unqualified to do the work any bidder who does not habitually perform with his own forces the major portions of the work involved in construction of the improvements embraced in this contract.

12. Equal Employment Opportunity

Attention is called to the requirements for ensuring that employees and applicants for employment are not discriminated against because of their race, color, creed, sex, or national origin.

13. Delay Penalties

Delay penalties for this contract shall be $200.00 per calendar day for each day beyond the number of calendar days bid for substantial completion time as specified in the Contract of the successful bidder.

14. Notice to All Bidders

a) The Texas Workers' Compensation Commission (TWCC) has adopted Rule 110.110 effective with all bids advertised September 1, 1994 and this does affect your bid on this project.

b) The TWCC has stated that it is aware that statutory requirements for workers' compensation insurance coverage are not being met. Rule 110.110 is designed to achieve compliance from both contractors and government entities. This affects both of us on this project.

c) Providing false or misleading certificates of coverage, failing to provide or maintain required coverage, or failing to report any changes that materially affects the coverage may subject the contractor(s) or other persons providing services on this project to legal penalties. This affects your subcontractors.

d) Please read carefully and prepare your bid in full compliance with TWCC Rule 110.110. Failure to provide the required certificates upon submission of a bid could result in your bid being declared non-responsive.

INFORMATION FOR BIDDERS

1. Scope of Work
   The work to be done under the contract documents shall consist of the following:

WASTEWATER LAGOON UPGRADE

The CONTRACTOR shall furnish all labor, superintendence, machinery, equipment, and all materials necessary to complete this project in accordance with contract documents.

2. Contract Documents
   All work covered by this contract shall be done in accordance with contract documents described herein. All bidders shall be thoroughly familiar with all of the requirements set forth on the contract documents for the construction of this project and shall be responsible for the satisfactory completion of all work contemplated by said contract documents. The ENGINEER reserves the right, after the bids have been opened and before the contract has been awarded, to require of a bidder the following information:
   a) The experience record of the bidder showing completed jobs of a similar nature to the one covered by the proposed contract and all work in progress with bond amounts and percentage completed.
   b) A sworn statement of the current financial condition of the bidder.
   c) Equipment schedule.
   d) Complete project schedule.
   e) Company safety plan (see Information for Bidders Paragraph 16)

3. Payment & Performance Bonds
   The successful bidder must furnish Performance and Payment Bonds for the total amount of the contract and Certificates of Insurance as called for in this agreement, within ten (10) days after being awarded the contract, or the bid bond or check will be retained by the OWNER as liquidated damages.

4. "Subsidiary Item", Incidental Item or "No Special Pay Item"
   Any and all work specifically governed by documentary requirements for the project, such as, conditions imposed by the plans and these special documents in which no specific item for bid has been provided for the proposal, shall be considered as a no separate pay item of work. It shall be the CONTRACTOR'S responsibility to recognize these items prior to submitting his proposal to the Owner.

5. First Aid at Job Site
   The CONTRACTOR shall maintain, at a well-known place, all articles necessary for getting first aid to the injured and will make standing arrangements for immediate removal to a hospital or to a doctor's care the persons including employees who may be injured on the job-site. CONTRACTOR shall inform, in writing, the Owner the location(s) and name(s) of hospitals and/or doctors, which will be used to treat injuries. In no case shall employees be permitted to work on the job-site before the CONTRACTOR has made a standing arrangement for removal of injured person to a hospital or to a doctor's care.

6. Payment
   All payments due to the CONTRACTOR shall be made in accordance with the provisions of the General Conditions of the Contract documents.

7. Affidavit of Bills Paid
   The Owner reserves the right, prior to final acceptance of this project to require the CONTRACTOR to execute an affidavit that all bills for labor, materials and incidentals incurred in the construction of the improvements contemplated by the contract documents have been paid in full and that there are no claims pending, of which the CONTRACTOR has been notified.

8. Materials and Workmanship
   The intent of this contract document is that only materials and workmanship of the best quality and grade will be furnished. The fact that the specifications may fail to be sufficiently complete in some detail will

not relieve the CONTRACTOR of full responsibility for of complying with this provision. The specifications for materials and methods set forth in the contract documents provide minimum standards of quality which the ENGINEER believes necessary to procure a satisfactory project.

9. Guarantees
All equipment and materials incorporated in the project and all construction shall be guaranteed against defective materials and workmanship. Prior to final acceptance, the CONTRACTOR shall furnish to the OWNER, a written general guarantee which shall provide that the CONTRACTOR shall remedy any defects in the work, and pay for any and all damages of any nature whatsoever, resulting in such defects, when such defects appear within one year from date of final acceptance of the work as a result of defective materials or workmanship, at no cost to the Owner.

10. Prosecution of the Work
The CONTRACTOR will be allowed to prosecute the work to the best interest of the job; however, the work shall be performed in such a manner to create as little disturbance as possible to the surrounding neighborhood.

11. Protection of the Work
The CONTRACTOR shall be responsible for the care, preservation, conservation, and protection of all materials, supplies, machinery, equipment, tools, apparatus, accessories, facilities, and all means of construction, and any and all parts of work, whether the CONTRACTOR has been paid, partially paid, or not paid for such work, until the date the ENGINEER issues its certificate of completion to CONTRACTOR.

12. Protection of Subsurface Lines and Structures
It shall be CONTRACTOR'S responsibility to prosecute the work contemplated by the contract documents in such a way as to exercise due care to locate and prevent damage to all underground pipeline, utility lines, conduits or other underground structures which might or could be damaged by the CONTRACTOR during the construction of the project contemplated by these contract documents. The ENGINEER will furnish CONTRACTOR the location of all such underground lines and utilities of which it has knowledge. However, such fact shall not relieve the CONTRACTOR of his responsibilities aforementioned. All such underground lines or structures cut or damaged by CONTRACTOR during the prosecution of the work contemplated by this contract shall be repaired immediately by CONTRACTOR to the satisfaction of the ENGINEER at CONTRACTOR'S expense.

13. Barricades and Safety Measures
The CONTRACTOR shall furnish and erect such barricades, fences, lights, and danger signals, and shall take such other precautionary measures for the protection of persons, property and the work.

The CONTRACTOR will be held responsible for all damage to the work due to failure of barricades, signs, and lights to protect it, and when damage is incurred, the damaged portion shall be immediately removed and replaced by CONTRACTOR at his own expense. The CONTRACTOR'S responsibility for maintenance of barricades, signs, and lights shall not cease until the date of issuance to CONTRACTOR of Owner's certificate of acceptance of this project.

14. Contractor's Representative
The successful bidder shall be required to have a responsible local representative available at all times while the work is in progress under this contract. The successful bidder shall be required to furnish the name, address, and telephone number where such local representative may be reached during the time that the work contemplated by this contract is in progress.

15. Sitework
The CONTRACTOR shall be responsible for all clean-up after all improvements are complete.

16. Safety
The CONTRACTOR and all Subcontractors and sub-Subcontractors shall comply with all applicable federal, state, and local laws, ordinances, rules, regulations, and orders of any public authority having

jurisdiction for the safety of persons or property to protect them from damage, injury, or loss, including the Occupational Safety and Health Act of 1970, and all amendments thereto (including, but not limited to **29 Code of Federal Regulations, Parts 1903, 1904, 1910 and 1926).** All machinery and equipment and other physical hazards shall be guarded in accordance with the "Manual of Accident Prevention in Construction", Latest Edition of the Associated General Contractors of America, except where incompatible with federal, state, or municipal laws or regulations. Copies of these publications shall be maintained at the project worksite at all times during construction. A copy of a Company Safety Plan, in accordance with Associated General Contractors of America, "Guide For a Basic Company Safety Plan", shall be maintained at the project work site at all times.

17. Coordination of Work With Water Distribution and Wastewater Treatment Facilities
The operating schedules of the existing water distribution and sewer facilities shall at all times have priority over the work of the project if the two operations are in conflict. Any construction operations which significantly affect city operations shall be identified by CONTRACTOR as early as possible and submitted to Engineer for coordination with the city operators. CONTRACTORS shall at all times conduct activities and perform work such that interruption of or disruption to city operations is minimized. The CONTRACTOR shall inform city operational personnel in writing at least 72 hours prior to interruption of water distribution or wastewater flow, and obtain approval of city personnel prior to commencing any action that will interrupt the identified system. Owner reserves the right to schedule the sequence of construction. CONTRACTOR is to coordinate work with owner. CONTRACTOR is responsible for supplying necessary equipment and controls to allow wastewater flow to continue uninterrupted during construction. CONTRACTOR is responsible for insuring construction work does not hinder water distribution or wastewater flows or cause City to violate regulatory criteria.

18. Project Sites, Easements, Permits & Licenses
Project sites and easements; and permits for construction inside the highway right-of-way; and licenses agreements for crossing railroads; as required to construct the Project will be acquired by the Owner and acquiring any other special licenses and permits required will be the responsibility of the Contractor unless specifically provided otherwise in the Contract Documents. The lands involved will be assumed to encompass at least the minimum areas needed to complete the work, but this does not necessarily mean that all trenches or other excavations can be back-sloped without bracing or shoring.

Copies of all such deeds, easements, permits, etc., shall be made available to the Contractor and it shall be the responsibility of the Contractor to secure same from Owner's Resident Project Representative before entering the premises.

19. Pre-Qualification of Bidders
There will not be a formal pre-qualification of bidders; however, the Owner reserves the right to reject any bid at any time prior to award of the Contract, if in the Owner's opinion, there is reasonable evidence that such bidder could not satisfactorily complete the project.

20. Property Lines and Monuments
The Contractor shall protect all property corner markers, and when such markers or monuments are in danger of being disturbed, they shall be properly referenced and if disturbed shall be reset at the expense of the Contractor.

21. Construction in Public Roads and Private Drives
The Contractor shall have the responsibility to provide and maintain all warning devices and take all precautionary measures required by law or otherwise to protect persons and property while said persons or property are approaching, leaving or within the work site or any area adjacent to said work site. Minimum standards for safeguarding pedestrian and vehicular traffic are contained in the "Texas Manual of Uniform Traffic Control Devices", Texas State Department of Highways and Public Transportation.
    a. No public road shall be entirely closed, unless specifically required in the contract documents. It shall be the responsibility of the Contractor to build and maintain all-weather by-passes and detours that might be required on and across the roads involved in the work included in this Contract.

b. Throughout the entire construction, the Contractor shall conduct his operations in such a manner that those requiring access to property adjacent to the construction shall be caused a minimum of inconvenience, and all drives shall be placed in usable condition as soon as practicable. Owners or tenants of property where access and/or entrance drives are located shall be notified at least twenty-four (24) hours prior to the time that the construction will be started at their driveways or entrance and informed as to the length of time they will be closed, which period shall not exceed six (6) hours.

BID PROPOSAL

FOR

CITY OF PECOS

WASTEWATER LAGOON UPGRADE

DATE_____2017

To: CITY OF PECOS

Upon acceptance of the proposal, the undersigned Bidder hereby agrees to do all the work and furnish all the necessary superintendence, labor, machinery, equipment, tools, materials and incidentals to complete all work on which he bids, having examined the plans and specifications with related documents and the sites of the proposed work, and being familiar with all of the conditions surrounding the construction of the proposed project, including the availability of materials and labor, in accordance with the Contract Documents, within the time set forth therein, and at the prices stated below.

The undersigned as bidder affirms (or, in the event of multiple bidders, such affirms) that the only person or parties interested in this bid as principal are those named herein; that this Bid Form is made without collusion with any other person, firm, or corporation, that he or she has carefully examined the form of contract, instructions to bidders, profiles, grades, specifications and the plans therein referred to, and has carefully examined the location, conditions and classes of materials of the proposed work; and agrees to provide all the necessary machinery; tools, apparatus, and other means of construction; and will do all the work and furnish all the materials called for in the contract and specifications in the manner prescribed therein and according to the requirements of the Engineer as therein set forth.

It is understood that the following quantities of work to be done are approximate only and are intended principally to serve as a guide in figuring out the bid.

It is further agreed that the quantities of work to be done and materials to be furnished may be increased or diminished as may be considered necessary, in the opinion of the Engineer, to complete the work fully as planned and contemplated, and that all quantities of work whether increased or decreased are to be performed at the unit price set forth below except as provided for in the specifications.

The below unit prices shall include all labor, materials, overhead, profit, insurance, etc., to cover the finished and complete job. Unit price must be given on each item contained in the following schedule, regardless of whether quantities are shown. Where there is disagreement in the unit and extension prices, the unit price shall govern. The Total Amount Bid shall be the sum of all correct(ed) 'Amount Bid' for all Item No.'s on the Bid Form sheets.

Unit prices must be written in ink in numeric figures.

Enclosed, with this proposal is a bid bond or a certified or cashier's check in the amount of 5% of the total amount bid.

Upon receipt of written notice of the acceptance of this bid, the bidder will execute the formal contract attached within (10) days and deliver a Surety Bond or Bonds as required to the Owner. If this information is satisfactory to the Owner, the Owner will issue a Notice to Proceed and the Contractor will substantially complete the work not later than 270 calendar days from the Notice to Proceed date. Final completion will be not later than 30 calendar days after substantial completion date.

BID FORM (SCHEDULE OF VALUES)

WASTEWATER TREATMENT PLAND IMPROVEMENT PROJECT

ITEM NUMBER	APPROX. QUANTITY	UNIT	ITEM DESCRIPTION	UNIT BID PRICE	EXTENDED AMOUNT
1	1	LS.	WET WELL (NOTE: EXISTING PUMPS TO BE REUSED)	$_____	$_____
2	1	LS.	CHLOR./ DE-CLOR/ AERATOR CONTACT BASIN	$_____	$_____
3	5	EA.	VAULTS	$_____	$_____
4	1	LS.	CHLORINE BUILDING	$_____	$_____
5	1	LS.	CHLORINE EQUIPMENT	$_____	$_____
6	1	LS.	DE-CHLOR. BUILDING	$_____	$_____
7	1	LS.	DE-CHLOR. EQUIPMENT	$_____	$_____
8	1	EA.	ULTRASONIC METER & BOX	$_____	$_____
9	1	LS.	AIR BLOWER BUILDING	$_____	$_____
10	3	EA.	AIR BLOWER UNITS/ EQUIPMENT	$_____	$_____
11	8	EA.	SHELL DIFFUSERS (AT AERATOR BASIN)	$_____	$_____
12	1	LS.	BIO-SHELL SYSTEM (BIO-SHELLS, MANIFOLDS, BAFFLE, AND LINE	$_____	$_____
13	19,210	CY.	POND 1-SLUDGE REMOVAL (NOTE: VERIFY FINAL QUANTITY)	$_____	$_____
14	4,170	CY.	POND 2-SLUDGE REMOVAL (NOTE: VERIFY FINAL QUANTITY)	$_____	$_____
15	2,850	CY.	POND 3-SLUDGE REMOVAL (NOTE: VERIFY FINAL QUANTITY)	$_____	$_____
16	1	EA.	POND 1-LINER; LEAK DETECTION SYSTEM; GRADING	$_____	$_____
17	1	EA.	POND 2-LINER; LEAK DETECTION SYSTEM; GRADING	$_____	$_____
18	1	EA.	POND 3-LINER; LEAK DETECTION SYSTEM; GRADING	$_____	$_____
19	2	EA.	WINDSOCK	$_____	$_____
20	4	EA.	16"-90° SDR 26 PVC FITTING	$_____	$_____
21	1	EA.	30"-SDR 26 PVC TEE	$_____	$_____
22	2	EA.	30"-45° SDR 26 PVC FITTING	$_____	$_____
23	1,767	LF.	16" SDR 26 PVC LINE	$_____	$_____
24	1,633	EA.	30" SDR 26 PVC LINE	$_____	$_____
25	1,057	LF.	10" WASTE WATERLINE REMOVAL/BACKFILL	$_____	$_____
26	510	LF.	15" WASTE WATERLINE REMOVAL/BAKCFILL	$_____	$_____
27	1	LS.	OLD BLOWER BLDG. REMOVAL/ BACKFILL AND GRADE	$_____	$_____
28	1	LS.	REMOVAL OF EXISTING HEADWORK AREA	$_____	$_____
29	1	LS.	REMOVAL OF EXISTING WET WELL (RE-USE PUMPS/SKID)	$_____	$_____
30	20	LF.	FENCE REMOVAL/ RE-INSTALL	$_____	$_____
31	1	LS.	TRENCH SAFETY	$_____	$_____
32	1	LS.	HEADWALL	$_____	$_____
33	10	EA.	16" VALVES AT VAULTS	$_____	$_____
34	1	LS.	MOBILIZATION/DE-MOBILIZATION	$_____	$_____
				TOTAL BID AMOUNT	$_____

NOTE: LINER PROVIDED BY CLIENT, CONTRACTOR TO INSPECT PRIOR TO BID

WTC Engineers · Surveyors

Knowledge of Local Conditions and Contract Documents: The undersigned has examined the location of the proposed work, the plan drawings, specifications and all other parts of the Contract Documents and is familiar with the Local Conditions at the place where the work is to be performed.

Addenda: The undersigned hereby acknowledges receipt of the following Addenda and further certifies that he has obtained corresponding acknowledgement of receipt from all his sub-contractors and suppliers.

Addendum No:	Dated:
_____	_____
_____	_____
_____	_____
_____	_____

Contract Time: If awarded the Contract, the undersigned agrees to substantially complete the work within 270 calendar days from the Notice to Proceed date and fully complete the work within 30 calendar days from the substantial completion date, as defined in paragraph 19 in General Conditions.

Owner's Rights Reserved: The undersigned understands and agrees that the owner reserves the right to reject any or all Proposals or to waive any informality or technicality in any Proposal in the interest of the owner, except as specially limited by the terms of Contract Documents or applicable Laws or Governmental Regulations.

The above Proposal is hereby respectfully submitted by:

NAME OF CONTRACTOR:_____

DATE:_____

EXECUTED BY:_____

TITLE OR POSITION:_____

BUSINESS_____
ADDRESS:_____

BUSINESS
PHONE:_____

BID BOND
Suggested Form

STATE OF TEXAS }
COUNTY OF _____}

KNOW ALL MEN BY THESE PRESENTS:

That _____,
hereinafter called Principal, and _____
_____, hereinafter
called Surety, are held and firmly bound unto _____
_____ hereinafter called
Obligee, in the full and just sum of _____
_____ Dollars, ($_____) good and lawful
money of the United States of America for the payment of which well and truly to be made, the said Principal and Surety hereby jointly and severally bind ourselves, heirs, executors, administrators, successors and assigns firmly by these presents.

THE CONDITION OF THIS OBLIGATION IS SUCH, that, whereas the Principal has submitted to the Obligee a certain Bid, attached hereto and made a part hereof to enter into a contract in writing for the construction of _____
_____
_____ NOW,
THEREFORE, if said Bid shall be rejected, or in the alternate, if said Bid shall be accepted and the Principal shall execute and deliver a contract in the Agreement Form attached hereto (properly completed in accordance with said Bid) and shall furnish a bond for his faithful performance of said contract, and a bond for the payment of all persons performing labor or furnishing materials in connection therewith, and shall in all other respects perform the agreement created by the acceptance of said Bid, then this obligation shall be void, otherwise the same shall remain in force and effect, it being expressly understood and agreed that the liability of the Surety for any and all claims hereunder shall, in no event, exceed the full and just sum of this obligation as herein stated.

The Surety, for value received, hereby stipulates and agrees that the obligations of said Surety and its bond shall be in no way impaired or affected by any extension of the time within which the Obligee may accept such Bid; and said Surety does hereby waive notice of any such extension.

IN WITNESS WHEREOF, THE Principal and the Surety have hereunto set their hands and seals, and such of them as are corporations have caused their corporate seals to be hereto affixed and these presents to be signed by their proper officers, the day and year first set forth above.

Dated this _____ day of _____, 20_____.

PRINCIPAL:	SURETY:
_____	_____
By_____	By_____
Title_____	Title_____
Address_____	Address_____

IMPORTANT – Surety companies executing bonds must appear on the Treasury Department's most current list (Circular 570 as amended) and be authorized to transact business in the state where the project is located.

CONTRACT DOCUMENTS

CONTRACT

THE AGREEMENT made this _____ day of _____ , 2017, by and between The CITY OF PECOS, herein called "OWNER", acting herein through its OWNER and _____of _____, County of _____, and State of _____hereinafter called "CONTRACTOR".

WITNESSETH: That for and in consideration of the payments and agreements hereinafter mentioned, to be made and performed by the OWNER, the CONTRACTOR hereby agrees with the OWNER to commence and complete the construction described as follows:

WASTEWATER LAGOON UPGRADE

hereinafter called the project, for the total sum of _____dollars and _____cents ($_____) for materials and all extra work in connection therewith, under the terms as stated in the Bound Documents of the Contract and at his (its or their) own proper cost and expense to furnish all materials, supplies, machinery, equipment, tools, superintendence, labor, insurance, and other accessories and services necessary to complete the said project in accordance with the conditions and prices stated in the Bid Proposal. Bound under one cover with this contract are the Table of Contents, Bid Documents (Including Notice to Bidders, Instructions to Bidders, and Information for Bidders), suggested Form Bid Bond, Bid Proposal, Form of Payment Bond, Form of Performance Bond, Insurance Requirements, Form of Affidavit and Guaranty, General Conditions and Specifications and Appendix, all of which documents are specifically included and made part of this document by reference, the same as if they had been included in full in this contract, together with all maps, plats and other documents furnished by the Owner and Engineer.

The CONTRACTOR hereby agrees to commence work under this contract on or before the date to be specified in a written "Notice to Proceed" of the OWNER and to substantially complete the project within 270 days of the Notice to Proceed with the work. The CONTRACTOR further agrees to pay, as liquidated damages, the sum of $ 200.00 for each consecutive calendar day thereafter as hereinafter provided in the General Conditions.

The OWNER agrees to pay the CONTRACTOR in current funds for the performance of the Contract, and to make payments on the account thereof as provided in the General Conditions.

The final Contract Agreement shall be governed and construed in accordance with the individual substantive laws of the State of Texas. The parties to the Agreement acknowledge that the project and subject matter of this Contract is in Reeves County. Exclusive venue shall be in Reeves County for any lawsuit or claim arising under, or in any way connected to, this project or Agreement.

IN WITNESS WHEREOF, the parties to these presents have executed this contract in five (5) counterparts, each of which shall be deemed an original, in the year and date first mentioned.

ATTEST:

CITY OF PECOS
(OWNER)

By:_____

(SEAL)

_____
CONTRACTOR

By:_____
(Signature)
PRINTED
NAME:_____
TITLE: _____
_____
_____

TEXAS STATUTORY PAYMENT BOND
(PUBLIC WORKS)

KNOW ALL MEN BY THESE PRESENTS, That _____ (hereinafter called the Principal), as principal, and _____ , a corporation organized and existing under the laws of the State of _____, licensed to do business in the State of Texas and admitted to write bonds, as Surety, (hereinafter called the Surety), are held and firmly bound unto _____ , (hereinafter called the Obligee), in the amount of _____ (Dollars) ($ _____) for the payment whereof, the said Principal and Surety bind themselves, and their heirs, administrators, executors, successors, and assigns, jointly and severally, firmly by these presents:

WHEREAS, the Principal has entered into a certain contract with the Obligee, dated the day _____ of 20___, for _____ which contract is hereby referred to and made a part hereof as fully and to the same extent as if copied at length herein.

NOW, THEREFORE, THE CONDITION OF THE OBLIGATION IS SUCH, That if the said Principal shall pay all claimants supplying labor and material to him or a subcontractor in the prosecution of the work provided for in said contract, then this obligation shall be null and void; otherwise to remain in full force and effect;

PROVIDED, HOWEVER, that this bond is executed pursuant to the provisions of Chapter 2253, Texas Government Code and all liabilities on this bond shall be determined in accordance with the provisions, conditions and limitations of said Article to the same extent as if it were copied at length herein.

Notice of Claim may be sent to:

_____ (Name of Surety Company)
_____ (Mailing Address for Surety Company)
_____ (Physical Address of Surety Company)
_____ (Telephone number including area code)

IN WITNESS WHEREOF, the said Principal and Surety have signed and sealed this instrument this _____ day of _____, 2017.

PRINCIPAL: _____

By: _____

(SEAL) SURETY: _____

By: _____

TEXAS STATUTORY PERFORMANCE BOND
(PUBLIC WORKS)

KNOW ALL MEN BY THESE PRESENTS, That _____

_____

(hereinafter called the Principal), as Principal, and _____

_____, a corporation organized and existing under the laws of the State of _____ licensed to do business in the State of Texas and admitted to write bonds, as Surety, (hereinafter called the Surety), are held and firmly bound unto _____ hereinafter called the Obligee), in the amount of _____

_____ (Dollars)

_____) for the payment whereof, the said Principal and Surety bind themselves, and their heirs, administrators, executors, successors, and assigns, jointly and severally, firmly by these presents:

_____

WHEREAS, the Principal has entered into a certain contract with the Obligee, dated the _____ day of _____ , 20___, for _____ which contract is hereby referred to and made a part hereof as fully and to the same extent as if copies at length herein.

NOW, THEREFORE, THE CONDITION OF THIS OBLIGATION IS SUCH, That if the said Principal shall faithfully perform the work in accordance with the plans, specifications and contract documents, then this obligation shall be null and void, otherwise to remain in full force and effect;

PROVIDED, HOWEVER, that this bond is executed pursuant to the provisions of Chapter 2253, Texas Government Code and all liabilities on this bond shall be determined in accordance with the provisions, conditions and limitations of said Article to the same extent as if it were copies at length herein.

Notice of Claim may be sent to:

_____ (Name of Surety Company)
_____ (Mailing Address for Surety Company)
_____ (Physical Address of Surety Company)
_____ (Telephone number including area code)

IN WITNESS WHEREOF, the said Principal and Surety have signed and sealed this instrument this _____ day of _____, 20___

PRINCIPAL: _____

By: _____

(SEAL) SURETY: _____

BY: _____

INSURANCE REQUIREMENTS

CONTRACTOR'S LIABILITY INSURANCE

The Contractor shall not commence work under this contract until he has obtained all the insurance required of this contract and such insurance has been approved by the Owner, nor shall the Contractor allow any Subcontractor to commence work on his subcontract until the insurance required of the Subcontractor has been so obtained and approved.

Without limiting any of the other obligations or liabilities of the Contractor under the Contract Documents, the Contractor shall purchase and maintain, during the Term of the Contract and at the Contractor's own expense, the minimum liability insurance coverage described below with companies duly authorized or approved to do business in the State of Texas and otherwise satisfactory to the Owner, certificates of insurance complying with the requirements of the contract which show the existence of each policy, together with copies of all policy endorsements showing the Owner and Engineer as an additional insured, and copies of these documents shall be delivered to the Owner and Engineer before any Work is started. Contractor shall promptly furnish, upon the request of and without expense to the Owner, a copy of each policy required, including all endorsements. None of the requirements contained in this contract as to types, limits or Owner's approval of insurance coverage to be maintained by Contractor is intended to and shall not in any manner limit, qualify or quantify the liabilities and obligations assumed by Contractor under the Contract Documents or otherwise provided by law. In the event of any failure by Contractor to comply with the provisions of the contract, Owner may, without in any way compromising or waiving any right or remedy at law or in equity, on notice to Contractor, purchase such insurance, at Contractor's expense (which may be deducted from any payment due by Owner to Contractor under the Contract Documents), provided that Owner shall have no obligation to obtain and maintain such insurance amounts and coverage's.

1. LIABILITY

a) Workers' Compensation, with statutory limits, with the policy endorsed to provide a waiver of subrogation as to the Owner and Engineer;

b) Employer's Liability Insurance of not less than $100,000 for each accident, $100,000 disease for each employee and $500,000 disease policy limit.

c) Commercial General Liability Insurance, Including Personal Injury Liability, Independent Contractor's Liability, Products and Completed Operations and Contractual Liability covering, but not limited to, the liability assumed under the indemnification provisions of this Contract, fully insuring Contractor's (or Subcontractor's) liability for injury to or death of the Owner's or Engineer's employees and third parties, and for damage to property of third parties, with a combined bodily injury (including death) and property damage minimum limit of $1,000,000 per occurrence, $2,000,000 annual aggregate. If coverage is written on a claims-made basis, coverage shall be continuous (by renewal or extended reporting period) for no less than 60 months following completion of the Contract and acceptance of Work by the Owner. Coverage, including any renewals, shall have the same retroactive date as the original policy applicable to the Project. The Owner and Engineer shall be named as additional insured's by using endorsement CG2026 or broader.

The general liability policy shall include coverage extended to apply to completed operations and XCU hazards. The Completed Operations coverage must be maintained for a minimum of one year after final completion and acceptance of the Work, with evidence of same filed with Owner. The policy shall include an endorsement CG2503 amendment of limits (designated project or premises) in order to extend the policy's limits specifically to the Project in question.

d) Business Automobile Liability Insurance, covering owned, hired and non- owned vehicles, with a

combined bodily injury (including death) and property damage minimum limit of $500,000 per occurrence. Such insurance shall include coverage for loading and unloading hazards.

2. PROPERTY INSURANCE

a) In addition to the insurance described above, the Contractor shall obtain at its expense, and maintain throughout the duration of the Project, All-Risk Builder's Risk Insurance, if the Project involves complete construction of a new building, or an All-Risk Installation Floater policy, if the Project involves materials and supplies needed for additions to, or renovations or remodeling of an existing building. Coverage on either policy shall be All-Risk, including, but not limited to, Fire, Extended Coverage, Vandalism and Malicious Mischief, Flood (if located in a flood zone) and Theft, in an amount equal to 100 percent of the insurable value of the Project for the Installation Floater policy, and 100 percent of the replacement cost of the Project for the Builder's Risk policy. If an Installation Floater policy is provided, the Owner shall be shown as a Joint Named Insured with respect to the Project. If a Builder's Risk policy is provided, the policy shall be written on a Completed Value Form, including materials delivered and labor performed for the Project. This policy shall be in the name of the Contractor and naming the Owner and the Subcontractors, and sub-Subcontractors as additional insured's as their interests may appear. The policy shall have endorsements as follows:

   i. This insurance shall be specific as to coverage and not contributing insurance with any permanent insurance maintained on the property.

   ii. Loss, if any, shall be adjusted with and made payable to the Contractor or the Owner and Contractor as trustee for the insured's as their interests may appear.

b) Loss of Use Insurance. The Owner, at the Owner's option, may purchase and maintain such insurance as will insure the Owner against loss of use of the Owner's property due to fire or other hazards, however caused.

3. 'UMBRELLA' LIABILITY INSURANCE

The Contractor shall obtain, pay for and maintain umbrella liability insurance during the Contract Term, insuring Contractor for an amount of not less than $5,000,000 per occurrence combined limit Bodily Injury (including death) and Property Damage, that follows from and applies in excess of the primary coverage required hereinabove. The Owner and Engineer shall be named as additional insured's using endorsement CG 20 26 or broader. No aggregate shall be permitted for this type of coverage. The policy shall provide "drop down" coverage where underlying primary insurance coverage limits are insufficient or exhausted.

4. POLICY ENDORSEMENTS AND SPECIAL CONDITIONS

a. Certificates of insurance acceptable to the Owner shall be filed with the Owner prior to commencement of the Work. These certificates required shall contain a provision that coverage's afforded under the policies will not be cancelled, nonrenewed, or materially changed until at least 30 days prior written notice has been given to the Owner. If any of the foregoing insurance coverage's are required to remain in force after final payment and are reasonably available, an additional certificate evidencing continuation of such coverage shall be submitted with the final application for payment.

b. If any insurance company for the Contractor, which company provides insurance required under the Contract Documents, becomes insolvent or becomes the subject of any rehabilitation, conservatorship, or liquidation or similar proceeding, the Contractor shall procure, immediately upon first notice of such occurrence and without cost to the Owner, replacement insurance coverage before continuing the performance of the Work at the Project. Any failure to provide such replacement insurance coverage shall constitute a material breach of the Contract.

c. Claims Made Policies. With respect to any of the insurance policies provided by Contractor pursuant to the Contract Documents which are "claims made" policies, in the event at any time any such policies are canceled or not renewed, Contractor shall provide to Owner a substitute insurance policy(ies) with terms and conditions and in amounts which comply with the terms of the Contract Documents and which provides for retroactive coverage to the date of cancellation or non-renewal to fill any gaps in coverage which may exist due to the cancellation or non-renewal of the prior "claims made" policies. With respect to all "claims made" policies which are renewed, Contractor shall provide coverage retroactive to the date of commencement of the Work in said renewed policy. All substitute or renewed "claims made" policies shall be maintained in full force and effect for the longer of (a) two (2) years from the date of Final Completion of the Work; or (b) as otherwise required by the Contract Documents. A certificate evidencing continuation of such policies shall be submitted with the final Application for Payment. Nothing herein shall affect the continuing effect of the indemnity clauses in the Contract Documents.

d. Owner may elect at any time during the Term of the Contract to require Contractor to procure and maintain other or additional insurance. Notice of such election shall be given at least sixty (60) days prior to the effective date of the required modifications. Any additional reasonable costs incurred by Contractor in securing such insurance shall be by Change Order.

e. Subcontractors. Similar to that required of Contractor, including an endorsement by the insurance company of Owner and Engineer as an Additional Insured, with limits of liability as determined by Owner, shall be provided by or on behalf of all Subcontractors to cover operations performed by such Subcontractors under the Contract Documents. Contractor shall be held responsible for any modification in the insurance requirements, as they apply to Subcontractors. Contractor shall maintain Certificates of Insurance from all Subcontractors, enumerating, among other things, the waivers in favor of, and insured status of the Owner and Engineer, as required herein, and shall make such Certificates available to Owner before commencing work. The term "Subcontractor(s)" shall include subcontractors of any tier.

f. Contractor and Subcontractor shall name Owner and Engineer as an additional insured on all insurance policies and Worker's Compensation shall waive subrogation in favor of the Owner and Engineer.

g. Each insurance policy to be furnished by the Contractor shall address the following required provisions within the certificate of insurance, which shall be reflected in the body of the insurance contract and/or by endorsement to the policy:

   i. That the Owner and Engineer shall be named as additional insured's on all liability coverage's, using endorsement CG 20 26 or broader.

   ii. That each insurance policy shall require that 30 days prior to the expiration, cancellation, nonrenewal or any material change in coverage, a notice thereof shall be given to Owner. Contractor shall also notify Owner, within ten days after receipt, of any notice of expiration, cancellation, nonrenewal or material change in coverage it receives from its insurer.

   iii. That the term "Owner" and "Engineer" shall include all authorities, boards, bureaus, commissions, divisions, departments and offices of the Owner and Engineer, and the individual members, employees, and agents thereof in their official capacities, while acting on behalf of Owner or Engineer.

   iv. That the policy phrase or clause "Other Insurance" shall not apply to Owner or Engineer where Owner or Engineer is an additional insured on the policy. The insurance coverage furnished by Contractor as required is considered to be primary insurance for purposes of the Project and the additional insured's named in the required policies.

   v. That all provisions of the Contract Documents concerning liability, duty and standard of

care, together with the indemnification provision, shall, to the maximum extent allowable in the insurance market, be underwritten by contractual liability coverage sufficient to include such obligations with the applicable liability policies.

vi. The Contractor hereby waives subrogation rights for loss or damage to the extent same are covered by insurance. Insurers shall have no right of recovery or subrogation against the Owner and Engineer, it being the intention that the insurance policies shall protect all parties to the Contract and be primary coverage for all losses covered by the policies. This waiver of subrogation shall be included, by endorsement or otherwise, as a provision of all policies required under this Section.

h. Insurance companies issuing the insurance policies and the Contractor shall have no recourse against the Owner or Engineer for payment of any premiums or assessments for any deductibles, as all such premiums and deductibles are the sole responsibility and risk of Contractor.

i. No special payments shall be made for any insurance policies that the Contractor and subcontractors are required to carry. All amounts payable regarding the insurance policies required under the Contract Documents are included in the Contract Sum.

AFFIDAVIT and GUARANTEE

AFFIDAVIT:

Place _____ Date_____

_____ by and through _____

(Contractor)

_____ its _____ does hereby

(Title)

and herewith declare that all labor costs, bills for materials, supplies, utilities, including any taxes thereon, and all other things furnished or caused to be furnished by the above named Contractor and used in the execution of the Contract dated: _____ for _____

_____

_____between_____

_____and_____ (Contractor)

have been fully paid, and that there are no unpaid claims or demands of sub-contractors, material men, mechanics, laborers, or any others resulting from or arising out of any work done or ordered to be done by said Contractor under the above identified contract; and declares:

that all Federal and State payroll taxes and contributions for unemployment insurance, old age pensions, annuities and retirement benefits imposed or assessed under any provisions of any law, State or Federal, and measured by wages, salaries, or other remuneration paid by said Contractor to employees of his own or sub-contractors engaged in said work, or in any operation incidental thereto, have been paid.

GUARANTEE:

_____ by and through

(Contractor)

_____ its_____

(Name) (Title)

does hereby and herewith guarantee for a period of One Year all materials and workmanship furnished or caused to be furnished by the above named Contractor in the execution of the Contract dated:_____

_____for_____

_____

_____

between_____ and _____

_____

(Contractor)

By_____

Subscribed and sworn before me this _____ day of _____, 20__.

(Notary Public)

Seal

My commission expires_____

GENERAL CONDITIONS

1. Contract
2. Definitions
3. Additional Instructions, Detail Drawings, and Schedules
4. Shop Drawings and Product Data Submittals
5. Materials, Services, and Facilities
6. Contractor's Title to Materials
7. Inspection and Testing of Material
8. "Or Equal" Clause
9. Patents
10. Survey, Permits, and Regulations
11. Contractor's Obligations
12. Weather Conditions
13. Protection of Work and Property - Emergency
14. Inspection
15. Reports, Records and Data
16. Superintendence by Contractor
17. Changes in Work
18. Extras
19. Time for Completion and Liquidated Damages
20. Observation by Engineer and Correction of Work
21. Subsurface Conditions Found Different
22. Claims for Extra Cost
23. Right of Owner to Terminate Contract
24. Construction Schedule and Periodic Estimates
25. Payments to Contractor
26. Acceptance of Final Payment as Release
27. Payments by Contractor
28. Insurance
29. Contract Security
30. Additional or Substitute Bond
31. Assignments
32. Mutual Responsibility of Contractors
33. Separate Contracts
34. Subcontracting
35. Engineer's Authority
36. Stated Allowances
37. Use of Premises and Removal of Debris
38. Quantities of Estimate
39. Lands of Rights-of-Way
40. General Guaranty
41. Conflicting Conditions
42. Notice and Service Thereof
43. Required Provisions Deemed Inserted
44. Other Prohibited Interests
45. Use Prior to Owner's Acceptance
46. Photographs
47. Suspension of Work
48. Underpayments of Wages
49. Overtime Compensation
50. Street Crossings
51. Coordination and Meetings
52. Texas Pollutant Discharge Elimination System (TPDES) Requirements

1. Contract and Contract Documents

The Plans, Specifications and Addenda, hereinafter enumerated in the General Conditions shall for part of this Contract and the provisions thereof be as binding upon the parties hereto as if they were herein full set forth. The table of contents, titles, headings, running headlines and marginal notes contained herein and in said documents are solely to facilitate reference to various provisions of the Contract Documents and in no way affect, limit or cast light on the interpretation of the provisions to which they refer.

The Owner reserves the right to let other contracts in connection with this work. The Contractor shall afford other Contractors reasonable opportunity for their introduction and storage of their materials and execution of their work and shall properly connect and coordinate his work with theirs.

2. Definitions

The following terms as used in this contract are respectively defined as follows:

(a) "Contractor": A person, firm or corporation with whom the contract is made by the Owner.
(b) "Subcontractor": A person, firm or corporation supplying labor and materials or only labor for work at the site of the project for, and under separate contract or agreement with, the Contractor.
(c) "Work on (at) the Project": Work to be performed at the location of the project, including the transportation of materials and supplies to or from the location of the project by employees of the Contractor and any Subcontractor.
(d) "Engineer": The firm or person representing the "Owner" and acting as the Engineer of Record.

3. Additional Instructions, Detail Drawings, and Schedules

The Contractor will be furnished additional instructions and detail drawings as necessary to carry out the work included in the contract. The additional drawings and instructions thus supplied to the Contractor will coordinate with the Contract Documents and will be so prepared that they can be reasonably interpreted as part thereof. The Contractor shall carry out the work in accordance with the additional detail drawings and instructions. The Contractor will prepare for the Engineer's approval two schedules: (a) a schedule, fixing the dates at which special detail drawings will be required, such drawings, if any, to be furnished by the Engineer in accordance with said schedule, and (b) a schedule fixing the respective dates for the submission of shop drawings, product data, the beginning of manufacture, testing and installation or materials, supplies and equipment, and the completion of the various parts of the work; each such schedule to be subject to change from time to time in accordance with the process of the work. The first schedule may be relatively simple for the Contractor's benefit but the second schedule will need to be detailed and complete for the use of the Engineer and Owner to understand the work planned by the Contractor. This schedule should at least meet the following requirements:

3.1 CONSTRUCTION SCHEDULE

A. During preconstruction meeting provide sample bar charts and activity listings produced from scheduling software proposed. Scheduling software is subject to review and approval by the Engineer. The Engineer will provide review of schedule samples within seven days of submittal.

B. Within five days of receipt of approval of Contractor's format, or ten days prior to Notice-to-Proceed, whichever is later, submit proposed Construction Schedule for review. Base Construction Schedule submittal on the following:

1. Level of detail and number of activities required in schedule are dependent on project type.

a. For bridge and road projects, categorize work type and testing requirements. All major elements of the project have to be on the schedule.

b. For projects with multiple types of tasks within scope, indicate types of work separately

within schedule.

c. For projects with work at different physical locations or service areas, or different facilities within a site, indicate each location or facility separately within schedule.

d. For projects with multiple crafts or significant Subcontractor components, indicate elements separately within schedule.

e. For all projects, indicate Shop Drawing and product data submittals and review, purchase, delivery, and installation dates on Project schedule. Include activities for testing, adjustment, and delivering O&M Manuals.

C. Construction Schedule submittals require:

1. The CONTRACTOR shall provide one copy of all Contract Schedules plotted as noted below. In addition, 2 CD ROMs including the schedule in PDF format as well as the Contractor's native electronic format (such as Primavera) shall be provided.

2. Printed bar charts that meet criteria outlined in this Section and are produced by Contractor's approved scheduling software.

3. Activity listings that meet criteria outlined in this Section and are produced by Contractor's approved scheduling software.

4. A predecessor/successor listing sorted by Activity ID that meets criteria outlined in this Section and is produced by Contractor's scheduling software.

5. Prepare and submit graphic or tabular display of estimated monthly billings (i.e. a cash flow curve for the Work) with the first schedule submittal. This information is not required in monthly updates, unless significant changes in work require re-submittal of schedule for review. Display shall allocate units indicated in bid schedule or Schedule of Values to Construction Schedule activities. Weighted allocations are acceptable, where appropriate. Dollar value associated with each allocated unit will be spread across the duration of that activity on a monthly basis. Total for each month and cumulative total will be indicated. These monthly forecasts are only for the Engineer's planning purposes. Monthly payments for actual work completed will be made in accordance with the contract documents.

6. Narrative Report that provides the information outlined below.

D. No payment will be made until Engineer approves Construction Schedule and billing forecast.

E. If Contractor desires to make changes in this method of operating and scheduling, after Engineer has reviewed original schedule, notify Engineer in writing, stating reasons for changes. When Engineer considers these changes to be significant, Contractor may be required to revise and resubmit for review all or affected portion of Contractor's Construction Schedule to show effect on the Work.

F. Upon written request from Engineer, revise and submit for review all or any part of Construction Schedule submittal to reflect changed conditions in the Work or deviations made from original schedule.

G. Updating the CONTRACTOR'S Construction Schedule and scheduling of changes and other events affecting the schedule is the responsibility of the CONTRACTOR. Contract Time

(including all contracted milestones) shall not be changed without a formal Change Order accepted by the OWNER.

H. Updated Construction Schedule with actual start and actual finish dates, percent complete, and remaining duration of each activity shall be submitted monthly. Data date used in updating monthly Construction Schedule shall be the same date used in monthly Payment Application. Monthly update of Construction Schedule is required for monthly Payment Application to be processed for payment.

3.2 SCHEDULING COMPUTER SOFTWARE REQUIREMENTS

A. Contractor's scheduling software shall be capable of creating bar charts and activity listings, which can be sorted by various fields (i.e. Activity ID, Early Start, Total Float, Area Code, Specification Section number, and Subcontractor). Use software capable of producing logic network diagram.

B. Use scheduling software capable of producing activity listings and bar charts with the following information for each activity in the schedule:

1. Activity ID
2. Activity Description
3. Estimated (Original) Duration
4. Remaining Duration
5. Actual Duration
6. Early Start Date
7. Late Start Date
8. Early Finish Date
9. Late Finish Date
10. Free Float
11. Total Float
12. Activity Codes (such as Area Code, Work Type, Specifications Section, Subcontractor)

C. Use scheduling software capable of printing calendars using mathematical analysis of schedule, indicating standard workdays of week and scheduled holidays.

D. Use scheduling software capable of printing activity listing that indicates predecessors and successors, lag factors, and lag relationships used in creating logic of the schedule.

E. Use scheduling software to provide monthly time in Bar Chart format and scale with 12-month scale not to exceed one page width. Bar charts may be printed or plotted on 8.5 x 11, 8.5 by 14, or 11 x 17 sheet sizes. Over-size plots are not acceptable.

3.3 NARRATIVE SCHEDULE REPORT

A. Narrative schedule report shall list activities started this month, activities completed this month, activities continued this month, activities scheduled to start or complete next month, problems encountered this month, and actions taken to solve these problems.

B. Narrative schedule report shall describe changes made to Construction Schedule logic (i.e., changes in predecessors and lags), activities added to schedule, activities deleted from schedule, any other changes made to the schedule other than addition of actual start dates and actual finish dates and changes of data and remaining durations for re-calculation of mathematical analysis.

4. Shop Drawings and Product Data Submittals

The Engineer shall review and approve or take other appropriate action upon the Contractor's submittals such as Shop Drawings and Product Data, but only for the limited purpose of checking for conformance with information given and the design concept expressed in the Contract Documents. Review of such submittals is not conducted for the purpose of determining the accuracy and completeness of other details such as dimensions and quantities, or for substantiating instructions for installation or performance of equipment or systems, all of which remain the responsibility of the Contractor as required by the Contract Documents. The Engineer's review shall not constitute approval of safety precautions or, unless otherwise specifically stated by the Engineer, of construction means, methods, techniques, sequences or procedures. The Engineer's approval of a specific item shall not indicate approval of an assembly of which the item is a component.

The Contractor shall submit promptly to the Engineer two copies of each shop drawing or product data prepared in accordance with the schedule predetermined as aforesaid. After examination of such drawings or product data by the Engineer and the return thereof, the Contractor shall make such corrections to the drawings as have been indicated and shall furnish the Engineer with two corrected copies. Regardless of corrections made in or approval given to such drawings or product data by the Engineer, the Contractor will nevertheless be responsible for the accuracy of such drawings or product data and for their conformity to the Plans and Specifications.

4.1 SUBMITTAL PROCEDURES

A. Scheduling and Handling:

1. Submit Shop Drawings, data and Samples for related components as required by Specifications and Engineer.

2. Schedule submittals well in advance of need for construction Products. Allow time for delivery of Products after submittal approval.

3. Develop submittal schedule that allows sufficient time for initial review, correction, resubmission, and final review of all submittals. Allow a minimum of 14 calendar days for initial review. Engineer review and return submittals to Contractor as expeditiously as possible but time required for review will vary depending on complexity and quantity of data submitted.

4. Designate in Construction Progress Schedule, dates for submittal and receipt of reviewed Shop Drawings and samples.

5. Assign a submittal number to each submittal or partial submittal using the Specification number first, and a sequential number for each submittal within that Specification.

6. Engineer's review of submittals covers only general conformity to Drawings, Specifications and dimensions that affect layout. Contractor is responsible for quantity determination. No

quantities will be verified by the Engineer. Contractor is responsible for errors, omissions, or deviations from Contract requirements; review of submittals does not relieve Contractor from the obligation to furnish required items in accordance with Drawings and Specifications.

7. One (1) electronic copy of submittal documents unless otherwise specified.

8. Revise and resubmit submittals as required. Identify all changes made since previous submittal.

9. Assume risk for fabricated Products delivered prior to approval. Do not incorporate Products into the Work, or include payment for Products in periodic progress payments, until approved by Engineer.

B. Transmittal Form and Numbering:

1. Transmit each submittal to Engineer with the a Transmittal form, which includes the following information:

   a. Date and submittal number

   b. Project title and number

   c. Names of Contractor, Subcontractor, Supplier and Manufacturer

   d. Identification of Product being supplied

   e. Location of where Product being supplied

   f. Applicable Specification section number

2. No deviation will be allowed without the written permission of the OWNER. If CONTRACTOR fails to notify OWNER of deviations, he shall pay for all cost for equipment replacement or removal to correct problem.

3. Have design deviations signed and sealed by an appropriate design professional, registered in the State of Texas.

4. Sequentially number transmittal letters beginning with number one. Use original number for resubmittals with an alphabetic suffix (i.e., 2A for the first resubmittal of submittal 2, or 15C for third resubmittal of submittal 15, etc.). Show only one type of work or Product on each submittal. Mixed submittals will not be accepted.

C. Contractor's Stamp:

1. Apply Contractor's Stamp certifying that the items have been reviewed in detail by Contractor and that they comply with Contract requirements.

2. As a minimum, Contractor's Stamp shall include:

   a. Contractor's name

   b. Job number

   c. Submittal number

d. Certification statement Contractor has reviewed submittal and it is in compliance with the Contract

e. Signature line for Contractor

D. Submittals will be returned with one of the following responses:

1. "ACKNOWLEDGE RECEIPT" when no response and resubmittal is required.

2. "NO EXCEPTION" when sufficient information has been supplied to determine that item described is accepted and that no resubmittal is required.

3. "EXCEPTIONS AS NOTED" when sufficient information has been supplied to determine that item will be acceptable subject to changes, or exceptions, which will be clearly stated. When exceptions require additional changes, the changes must be submitted for approval. Resubmittal is not required when exceptions require no further changes.

4. "REJECTED-RESUBMIT" when submittal does not contain sufficient information, or when information provided does not meet Contract requirements. Additional data or details requested by Construction Manager must be submitted to obtain approval.

4.2 MANUFACTURER'S CERTIFICATES

A. When required by Specification sections, submit manufacturers' certificate of compliance for review by the Engineer.

B. Place Contractor's Stamp on front of certification.

C. Submit supporting reference data, affidavits, and certifications as appropriate.

D. Product certificates may be recent or from previous test results, but must be acceptable to the Engineer.

4.3 DESIGN MIXES

A. When required by Specification sections, submit design mixes for review.

B. Place Contractor's Stamp, as specified in this section, on the front of each design mix.

C. Mark each mix to identify proportions, gradations, and additives for each class and type of mix submitted. Include applicable test results from samples for each mix. Perform tests and certifications within 12 months of the date of the submittal.

D. Maintain copies of approved mixes at mixing plant.

4.4 TESTING RESULTS

A. Contractor is required to submit one (1) electronic copy of all testing reports.

B. Copies of Field Testing Reports must be submitted the same day as the testing is performed.

C. Final Testing Results must be Certified by a Licensed Professional.

D. Final Certified Testing Results must be submitted to the Engineer within three days of receipt from the Testing Laboratory.

5. Materials, Services, and Facilities

(a) It is understood that except as otherwise specifically stated in the Contract Documents, the Contractor shall provide and pay for all materials, labor, tools, equipment, water, light, power, transportation, superintendence, temporary construction of every nature, and all other services and facilities of every nature whatsoever necessary to execute, complete, and deliver the work within the specified time.

(b) Any work necessary to be performed after regular working hours, on Sundays or Legal Holidays, shall be performed without additional expense to the Owner.

6. Contractor's Title to Materials

No materials or supplies for the work shall be purchased by the Contractor or by any Sub-Contractor subject to any chattel mortgage or under conditional sale contract or other agreement by which an interest is retained by the seller. The Contractor warrants that he has good title to all materials and supplies used by him in the work, free from all liens, claims or encumbrances.

7. Inspection and Testing of Materials

(a) All materials and equipment used in the construction of the project shall be subject to adequate inspection and testing in accordance with accepted standards. The laboratory or inspection agency shall be selected by the Owner. The Owner will pay for all laboratory inspection services direct, and not as a part of the contract.

(b) Materials of construction, particularly those upon which the strength and durability of the structure may depend, shall be subject to inspection and testing to establish conformance with specifications and suitability for uses intended.

8. "Or Equal" Clause

Whenever a material, article or piece of equipment is identified on the plans or in the specifications by reference to manufacturers' or vendors' names, trade names, catalogue numbers, etc., it is intended merely to establish a standard; and any material, article, or equipment or other manufacturers and vendors which will perform adequately the duties imposed by the general design will be considered equally acceptable provided the material, article, or equipment so proposed, is in the opinion of the Engineer, of equal substance and function. It shall not be purchased or installed by the Contractor without the Engineer's written approval.

9. Patents

(a) The Contractor shall hold and save the Owner and its officers, agents, servants, and employees harmless from liability of any nature or kind, including cost and expenses for, or on account of, any patented or unpatented invention, process, article, or appliance manufactured or used in the performance of the contract, including its use by the Owner, unless otherwise specifically stipulated in the Contract Documents.

(b) License or Royalty Fees: License and/or Royalty Fees for the use of a process which is authorized by the Owner of the Project must be reasonable, and paid to the holder of the patent, or his authorized licensee, direct by the Owner and not by or through the Contractor.

(c) If the Contractor uses any design, device or materials covered by letter, patent or copyright, he shall

provide for such use by suitable agreement with the Owner of such patented or copyrighted design, device or material. It is mutually agreed and understood, that, without exception, the contract prices shall include all royalties or costs arising from the use of such design, device or materials, in any way involved in the work. The Contractor and/or his Sureties shall indemnify and save harmless the Owner of the project from any and all claims for infringement by reason of the use of such patented or copyrighted design, device or materials or any trademark or copyright in connection with work agreed to be performed under this contract, and shall indemnify the Owner for any cost, expense or damage which it may be obliged to pay by reason of such infringement at any time during the prosecution of the work or after completion of the work.

10. Surveys, Permits, and Regulations

Unless otherwise expressly provided for in the Contract Documents or Specifications, the Owner will furnish to the Contractor all surveys necessary for the execution of the work.

The Contractor shall procure and pay all permits, licenses, approvals, charges, fees, and taxes and give all notices necessary and incident to the due lawful prosecution of the work and contract.

The Contractor shall comply with all laws, ordinances, rules, orders, and regulations relating to performance of the work, the protection of adjacent property, and the maintenance of passage ways, guard fences or other protective facilities.

The Contractor shall post on each project site a notice, in the text, form and manner prescribed by the Texas Workers' Compensation Commission (coverage in accordance with 28 TAC 110.110.), informing all persons providing services on the project that they are required to be covered, and stating how a person may verify coverage and report lack of coverage. The Contractor shall also post on each project site, the prevailing wage rates associated with the project when required, copies of the SW3P, and any additional documentation that the Owner deems necessary for the project.

Where construction projects cross or run along a State Highway, the Contractor shall comply with governing Texas Highway Department Regulations as outlined in State Permits for each crossing. In cases where State Regulations do not apply, County and/or City Regulations shall be binding.

The Contractor shall comply with the provisions of the following document as applicable to the performance of this contract:

> "Federal Register, Volume 36, No. 75, Part II, Department of Labor and Bureau of Labor Standards, Safety and Health Regulations for Construction, dated April 17, 1971, and revisions thereto," in addition to any provisions outlined and or referred to in the specifications.

The Contractor shall at his entire expense provide and maintain in a neat, sanitary condition such accommodations for the use of his employees as may be necessary to comply with the requirements and regulations of the Local Health District and of the State Department of Health.

The Contractor shall make himself familiar with and at all times shall observe and comply with all Federal, State and Local laws, ordinances, and regulations which in any manner affect the conduct of the work and shall indemnify and save harmless the Owner and Engineer and their representatives against any claim arising from the violation of any such law, ordinance, or regulations, whether by himself or by his employees. The safety of the people and the convenience of traffic shall be regarded as the prime importance. The Contractor shall provide for ingress and egress to private property as shown on the Plans or as directed by the Owner.

11. Contractor's Obligations

The Contractor shall and will, in good workmanlike manner, do and perform all work and furnish all supplies and materials, machinery, equipment, facilities and means, except as herein otherwise expressly specified, necessary or proper to perform and complete all the work required by this contract, within the

time herein specified, in accordance with the provisions of the contract and said specifications and in accordance with the plans and drawings covered by this contract any and all supplemental plans and drawings, and in accordance with the directions of the Engineer as given from time to time during the progress of the work. He shall furnish, erect, maintain, and remove such construction plant and such temporary works as may be required.

The Contractor shall at all times keep the construction area, including storage areas used by him, free from accumulations of waste material or rubbish and prior to completion of the work, he shall remove any rubbish and all tools, scaffolding equipment, and materials not the property of the Owner from and about the premises. Upon completion of the construction, the Contractor shall leave the work and premises in a clean, neat and workmanlike condition satisfactory to the Owner.

12. Weather Conditions

In the event of temporary suspension of work, or during inclement weather, or whenever the Engineer shall direct, the Contractor will, and will cause his Subcontractors to protect carefully his and their work and materials against damage or injury from the weather. If, in the opinion of the Engineer, any work or materials shall have been damaged or injured by reason of failure on the part of the Contractor or any of his Subcontractors so to protect his work, such materials shall be removed and replaced at the expense of the Contractor.

13. Protection of Work and Property - Emergency

The Contractor shall at all times safely guard the Owner's property from injury or loss in connection with this contract. He shall at all times safely guard and protect his own work, and that of adjacent property from damage. The Contractor shall replace or make good any such damage, loss or injury unless such be caused directly by errors contained in the contract or by the Owner, or his duly authorized representatives.

In case of an emergency which threatens loss or injury of property, and/or safety of life, the Contractor will be allowed to act, without previous instructions from the Owner, in a diligent manner. He shall notify the Owner immediately thereafter. Any claim for compensation by the Contractor due to such extra work shall be promptly submitted to the Owner for approval.

Where the Contractor has not taken action but has notified the Owner of an emergency threatening injury to persons or damage to the work or any adjoining property, he shall act as instructed or authorized by the Owner.

The amount of reimbursement claimed by the Contractor on account of any emergency action shall be determined in the manner provided in Paragraph 17 of the General Conditions.

The Contractor shall provide at the Site, such equipment and medical facilities as are necessary to supply first aid service to anyone who may be injured in connection with the Work. The Contractor must promptly report, in writing, to the Owner, all accidents whatsoever arising out of, or in connection with, the performance of the work whether on or adjacent to the Site which caused death, personal injury, or property damage, giving full details and statement of witnesses. In addition, if death, serious injury, or serious damage is caused, the accident then shall be reported immediately by telephone or messenger.

14. Inspection

The authorized representatives and agents of the Owners and Engineer shall be permitted to inspect all work, materials, payrolls, records of personnel, invoices of materials, and other relevant data records.

15. Reports, Records and Data

The Contractor shall submit to the Owner such schedule of quantities and costs, progress schedules, payrolls, reports, estimates, records and other data as the Owner may request concerning work performed

or to be performed under the contract.

16. Superintendence by Contractor

At the site of the work the Contractor shall employ a construction superintendent or foremen who shall have full authority to act for the Contractor. It is understood that such representative shall be acceptable to the Engineer and shall be one who can be continued in that capacity for the particular job involved unless he ceases to be on the Contractor's payroll.

17. Changes in Work

No changes in the work covered by the approved Contract Documents shall be made without having prior written approval of the Owner. Charges or credits for the work covered by the approved change shall be determined by one or more, or a combination of the following methods:

(a) Unit bid prices previously approved.
(b) An agreed lump sum.
(c) The actual cost of:

1. Labor, including foremen;
2. Materials entering permanently into the work;
3. The ownership or rental cost of construction plant and equipment during the time of use on the extra work;
4. Power and consumable supplies for the operation of power equipment;
5. Insurance;
6. Social Security, medical, and unemployment contributions.

To the cost under (c) there shall be added a fixed fee to be agreed upon but not to exceed fifteen percent (15%) of the actual cost of the work. The fee shall be compensation to cover the cost of supervision, overhead, bond, profit and any other general expenses.

18. Extras

Without invalidating the contract, the Owner may order extra work or make changes by altering, adding to or deducting from the work, the contract sum being adjusted accordingly, and the consent of the Surety being first obtained where necessary or desirable. All the work of the kind bid upon shall be paid for at the price stipulated in the proposal, and no claims for any extra work or materials shall be allowed unless the work is ordered in writing by the Owner or its Engineer, acting officially for the Owner and price is stated in such order.

19. Time for Completion and Liquidated Damages

It is hereby understood and mutually agreed, by and between the Contractor and the Owner, that the date of beginning and the time for completion as specified in the contract of the work to be done hereunder are ESSENTIAL CONDITIONS of this contract' and it is further mutually understood and agreed that the work embraced in this contract shall be commenced in a timely manner after the Notice to Proceed date.

The Contractor agrees that said work shall be prosecuted regularly, diligently, and uninterruptedly at such rate of progress as will insure full completion thereof within the time specified. It is expressly understood and agreed, by and between the Contractor and the Owner, that the time for the completion of the work described herein is a reasonable time for the completion of the same, taking into consideration the average climatic range and usual industrial conditions prevailing in this locality.

If the said Contractor shall neglect, fail or refuse to complete the work within the time herein specified, or any proper extension thereof granted by the Owner, then the Contractor does hereby agree, as a part consideration for the awarding of this contract, to pay to the Owner the amount specified in the contract,

not as a penalty but as a liquidated damages for such breech of contract as hereinafter set forth, for each and every calendar day that the Contractor shall be in default after the time stipulated in the contract for completing the work.

The said amount is fixed and agreed upon by and between the Contractor and the Owner because of the impracticability and extreme difficulty of fixing and ascertaining the actual damage which the Owner would sustain and said amount shall be retained from time to time by the Owner from current periodical estimates.

It is further agreed that time is of the essence of each and every portion of this contract and of the specifications wherein a definite and certain length of time is fixed for the performance of any act whatsoever; and where under the contract and additional time is allowed for the completion of any work, the new time limit fixed by such extension shall be of the essence of this contract. PROVIDED, that the Contractor shall not be charged with liquidated damages or any excess cost when the Owner determines that the Contractor is without fault and the Contractor's reasons for the time extension are acceptable to the Owner; PROVIDED, FURTHER, that the Contractor shall not be charged with liquidated damages or any excess cost when the delay in completion of the work is due:

(a) To any preference, priority of allocation or duly issued by the Government;

(b) To unforeseeable cause beyond the control and without the fault or negligence of the Contractor, including, but not restricted to, acts of God, or of the public enemy, acts of the Owner, acts of another Contractor in the performance of contract with the Owner, fires, floods, epidemics, quarantine restrictions, strikes, freight embargoes, and severe weather;

(c) To any delays of Subcontractors or suppliers occasioned by any of the caused specified in subsections (a) and (b) PROVIDED, FURTHER, that the Contractor shall, within ten (10) days from the beginning of such delay, unless the Owner shall grant a further period of time prior to the date of final settlement of the contract, notify the Owner, in writing, of the causes of the delay, who shall ascertain the facts and extent of the delay and notify the Contractor within a reasonable time of its decision in the matter.

20. Observation by Engineer and Correction of Work

The Engineer, as a representative of the Owner, shall visit the site at intervals appropriate to the stage of the Contractor's operations, or as otherwise agreed by the Owner and the Engineer, (1) to become generally familiar with and to keep the Owner informed about the progress and quality of the portion of the Work completed, (2) to endeavor to guard the Owner against defects and deficiencies in the Work, and (3) to determine in general if the Work is being performed in a manner indicating that the Work, when fully completed, will be in accordance with the Contract Documents. However, the Engineer shall not make exhaustive or continuous on-site inspections to check the quality or quantity of the Work. The Engineer shall neither have control over or charge of, nor be responsible for, the construction means, methods, techniques, sequences or procedures, or for safety precautions and programs in connection with the Work, since these are solely the Contractor's rights and responsibilities.

Duties, responsibilities and limitations of authority of the Engineer shall not be restricted, modified or extended without written agreement of the Owner and Engineer with consent of the Contractor, which consent will not be unreasonably withheld.

All work, all materials, whether incorporated in the work or not, all processes of manufacture, and all methods of construction shall be at all times and places subject to the observation of the Engineer who shall be the final judge of the quality and suitability of the final judge of the quality and suitability of the work, materials, processes of manufacture, and methods of construction for the purposes for which they are used. Should they fail to meet his approval they shall be forthwith reconstructed, made good, replaced and/or corrected, as the case may be, by the Contractor at his own expense. Rejected material shall immediately be removed from the site. If, in the opinion of the Engineer, it is undesirable to replace any defective or damaged materials or to reconstruct or correct any portion of the work injured or not performed in accordance with the contract documents, the compensation to be paid to the Contractor

hereunder shall be reduced by such amount as in the judgment of the Engineer shall be equitable.

21. Subsurface Conditions Found Different

Should the Contractor encounter sub-surface and/or latent conditions at the site materially differing from those shown on the Plans or indicated in the Specifications, he shall immediately give notice to the Engineer of such conditions before they are disturbed. The Engineer will thereupon promptly investigate the conditions, and if he finds that they materially differ from those shown on the Plans or indicated in the Specifications, he will at once make such changes in the Plans and/or Specifications as he may find necessary, any increase or decrease of cost resulting from such changes to be adjust in the manner provided in Paragraph 17 of the General Conditions.

22. Claims for Extra Cost

No claim for extra work or cost shall be allowed unless the same was done in pursuance of a written order of the Engineer approved by the Owner, as aforesaid, and the claim presented with the first estimate after the changed or extra work is done. When work is performed under the terms of subparagraph 17, (c) of the General Conditions, the Contractor shall furnish satisfactory bills, payrolls and vouchers covering all items of cost and when requested by the Owner, give the Owner access to accounts relating thereto.

23. Right of the Owner to Terminate Contract

In the event that any of the provisions of this contract are violated by the Contractor, or by any of his Subcontractors, the Owner may serve written notice upon the Contractor and the Surety of its intention to terminate the contract, such notices to contain the reasons for such intention to terminate the contract, and unless within ten (10) days after the serving of such notice upon the Contractor, such violation or delay shall cease and satisfactory arrangement of correction be made, the contract shall, upon the expiration of said ten (10) days, cease and terminate. In the event of any such termination, the Owner shall immediately serve notice thereof upon the Surety and the Contractor and the Surety shall have the right to take over and perform the contract. Provided, however, that if the Surety does not commence performance thereof within ten (10) days from the date of the mailing to such Surety of notice of termination, the Owner may take over the work and prosecute the same to completion by contract or by force account for the account and at the expense of the Contractor and the Contractor and his Surety shall be liable to the Owner for any excess cost occasioned the Owner hereby, and in such event the Owner may take possession of and utilize in completing the work, such materials, appliances, and plant as may be on the site of the work and necessary therefore.

24. Construction Schedule and Periodic Estimates

Immediately after execution and delivery of the contract, and before the first partial payment is made, the Contractor shall deliver to the Owner and Engineer an estimated construction progress schedule in form satisfactory to the Owner, showing the proposed dates of commencement and completion of each of the various subdivisions of work required under the Contract Document and the anticipated amount of each monthly payment that will become due the Contractor in accordance with the progress schedule. The Contractor shall also furnish (a) a detailed estimate giving a complete breakdown of the contract price, and (b) periodic itemized estimates of work done for the purpose of making partial payments thereon. The costs employed making up any of these schedules will be used only for determining the basis of partial payments and will not be considered as fixing a basis for additions to or deductions from the contract price.

25. Payments to Contractor

(a) Not later than the 15th day of each calendar month the Owner shall make a progress payment to the Contractor on the basis of a duly certified and approved estimate of the work performed during the preceding calendar month under this contract, but to insure the proper performance of this contract, the Owner shall retain ten percent (10%) of the amount of each estimate until at least 30 days after substantial completion and acceptance by the Owner of all work having reached final completion;

(b) In preparing estimates the material delivered on the site and preparatory work done may be taken into consideration.

(c) All material and work covered by partial payments made shall thereupon become the sole property of the Owner, but this provision shall not be construed as relieving the Contractor from the sole responsibility for the care and protection of materials and work upon which payments have been made or the restoration of any damaged work, or as a waiver of the right of the Owner to require fulfillment of all of the terms of the contract.

(d) The Contractor agrees that he will indemnify and save the Owner and Engineer harmless from all claims growing out of the lawful demands of Subcontractors, laborers, workmen, mechanics, materialmen, and furnishers of machinery and parts thereof, equipment, power tools, and all supplies, incurred in the furtherance of the performance of this contract. The Contractor shall at the Owners request, furnish satisfactory evidence that all such obligations have been paid, discharged, or waived. If the Contractor fails to do so, then the Owner may, after having served written notice on said Contractor, withhold any further payments the Owner owes to the Contractor, and immediately, by certified mail, give notice to the Surety on the payment and performance bonds of the Contractor, that the Contractor, in the opinion of the Owner, has defaulted in the performance of this contract, in which case, the Contractor releases the Owner from any liability therefore, it being understood and agreed by the parties hereto that if the Owner makes such decision, that such decision in binding upon all parties hereto.

26. Acceptance of Final Payment Constitutes Release

The acceptance by the Contractor of final payment shall be and shall operate as a release to the Owner of all claims and all liability to the Contractor for all the things done or furnished in connection with this work and for every act and neglect of the Owner and others relating to or arising out of this work. No payment, however, final or otherwise, shall operate to release the Contractor or his sureties from any obligations under this contract or the Performance and Payment Bond.

27. Payments by Contractor

The Contractor shall pay (a) for all transportation and utility services not later than the 20th day of the calendar month following that in which services rendered, (b) for all materials, tools, and other expendable equipment to the extent of ninety percent (90%) of the cost thereof, not later than the 20th day of the calendar month following that in which such materials, tools, and equipment are delivered at the site of the project, and the balance of the cost thereof, not later than the 30th day following the completion of that part of the work in or on which such materials, tools, and equipment are incorporated or used, and (c) to each of his Subcontractors, not later than the 5th day following each payment to the Contractor, the respective amounts allowed the Contractor on account of the work performed by his Subcontractors to the extent of each Subcontractor's interest therein.

28. Insurance

The Contractor shall not commence work under this contract until he has obtained all the insurance required under this paragraph and such insurance has been approved by the Owner, nor shall the Contractor allow any Subcontractor to commence work on his subcontract until the insurance required of the Subcontractor has been so obtained and approved.

(a) COMPENSATION INSURANCE: The Contractor shall procure and shall maintain during the life of this contract Workmen's Compensation Insurance as required by applicable State or territorial law for all of his employees to be engaged in work at the site of the project under this contract and, in case of any such work sublet, the Contractor shall require the Subcontractor similarly to provide Workmen's Compensation Insurance for all of the latter's employees to be engaged in such work unless employees are covered by the protection afforded by the Contractor's Workmen's Compensation Insurance. In case any class of employees engaged in hazardous work on the project under this contract is not protected under the Workmen's Compensation Statute, the Contractor shall provide and shall cause each

Subcontractor to provide adequate employer's liability insurance for the protection of such of his employees as are not otherwise protected.

(b) CONTRACTOR'S PUBLIC LIABILITY AND PROPERTY DAMAGE INSURANCE AND VEHICLE LIABILITY INSURANCE: The Contractor shall procure and shall maintain during the life of this contract Contractor's Public Liability Insurance, Contractor's Property Damage Insurance and Vehicle Liability Insurance in the amounts specified in the Supplemental General Conditions.

(c) SUBCONTRACTOR'S PUBLIC LIABILITY AND PROPERTY DAMAGE INSURANCE AND VEHICLE LIABILITY INSURANCE: The Contractor shall either (1) require each of his Subcontractors to procure and to maintain during the life of his subcontract, Subcontractor's Public Liability and Property Damage Insurance and Vehicle Liability Insurance of the type and in the amounts specified in the Supplemental General Conditions specified in subparagraph (b) hereof or, (2) insure the activities of his policy, specified in subparagraph (b) hereof.

(d) SCOPE OF INSURANCE AND SPECIAL HAZARDS: The insurance required under subparagraphs (b) and (c) hereof shall provide adequate protection for the Contractor against damage claims which may arise from operations under this contract, whether such operations be by the insured or by anyone directly or indirectly employed by him and, also against any of the special hazards which may be encountered in the performance of this contract as enumerated in the Supplemental General Conditions.

(e) BUILDER'S RISK INSURANCE (FIRE AND EXTENDED COVERAGE): Until the project is completed and accepted by the Owner, the Contractor is required to maintain Builder's Risk Insurance (fire and extended coverage) on a 100 percent (100%) completed value basis on the insurable portion of the project for the benefit of the Owner, the Contractor, Subcontractors as their interests may appear. The Contractor shall not include any costs for Builder's Risk Insurance (fire and extended coverage) premiums during construction unless the Contractor is required to provide such insurance; however, this provision shall not release the Contractor from his obligation to complete, according to plans and specifications, the project covered by the contract, and the Contractor and his Surety shall be obligated to full performance of the Contractor's undertaking.

(f) PROOF OF CARRIAGE OF INSURANCE: The Contractor shall furnish the Owner with certificates showing the type, amount, class of operations covered, effective dates and date of expiration of policies. Such certificates shall also contain substantially the following statement: "The insurance covered by this certificate will not by canceled or materially altered, except after ten (10) days written notice has been received by the Owner."

29. Contract Security

The Contractor shall furnish a performance bond in an amount at least equal to one hundred percent (100%) of the contract prices as security for the faithful performance of this contract and also a payment bond in an amount not less than one hundred percent (100%) of the contract price or in a penal sum not less than that prescribed by State, territorial or local law, as security for the payment of all persons performing labor on the project under this contract and furnishing materials in connection with this contract. The performance bond and the payment bond may be in one or in separate instruments in accordance with local law.

30. Additional or Substitute Bond

If at any time the Owner for justifiable cause shall be or become dissatisfied with any surety or sureties, then upon the Performance of Pavement Bonds, the Contractor shall within five (5) days after notice from the Owner to do so, substitute an acceptable bond (or bonds) in such form and sum and signed by such other surety or sureties as may be satisfactory to the Owner. The premiums on such bond shall be paid by the Contractor. No further payments shall be deemed due nor shall be made until the new surety of sureties shall have furnished such an acceptable bond to the Owner.

31. Assignments

The Contractor shall not assign the whole or any part of this contract or any moneys due or to become due hereunder without written consent of the Owner. In case the Contractor assigns all or any part of any moneys due or to become due under this contract, the instrument of assignment shall contain a clause substantially to the effect that it is agreed that the right of the assignee in and to any moneys due or to become due to the Contractor shall be subject to prior claims of all persons, firms and corporations of services rendered or materials supplied for the performance of the work called for in this contract.

32. Mutual Responsibility of Contractors

If, through acts of neglect on the part of the Contractor, any other Contractor or any Subcontractor shall suffer loss or damage on the work, the Contractor agrees to settle with such other Contractor or Subcontractor by agreement or arbitration if such other Contractor or Subcontractor will so settle. If such other Contractor or Subcontractor shall assert any claim against the Owner or Engineer on account of any damage alleged to have been sustained, the Owner or Engineer shall notify the Contractor, who shall indemnify and save harmless the Owner or Engineer against any such claim.

33. Separate Contract

The Contractor shall coordinate his operations with those of other Contractors. Cooperation will be required in the arrangement for the storage of materials and in the detailed execution of the work. The Contractor, including his Subcontractor, shall keep informed of the progress and the detail work of other Contractors and shall notify the Engineer immediately of lack of progress or defective workmanship on the part of the other Contractors. Failure of a Contractor to keep informed of the work progressing on the site and failure to give notice of lack of progress or defective workmanship by others shall be construed as acceptance by him of the status of the work as being satisfactory for proper coordination with his own work.

34. Subcontracting

(a) The Contractor may utilize the services of specialty Subcontractors on those parts of the work which, under normal contracting practices, are performed by specialty Subcontractors.

(b) The Contractor shall not award any work to any Subcontractor without prior written approval of the Owner, which approval will not be given until the Contractor submits to the Owner a written statement concerning the proposed award to the Subcontractor, which statement shall contain such information as the Owner may require.

(c) The Contractor shall be as fully responsible to the Owner for the acts and omissions of his Subcontractors, and of persons either directly or indirectly employed by them as he is for the acts and omissions of persons directly employed by him.

(d) The Contractor shall cause appropriate provisions to be inserted in all subcontracts relative to the work to bind Subcontractors to the Contractor by the terms of the General Conditions and other contract documents insofar as applicable to the work of Subcontractors and to give the Contractor the same power as regards terminating any subcontract that the Owner may exercise over the Contractor under any provision of the contract documents.

(e) Nothing contained in this contract shall create any contractual relation between any Subcontractor and the Owner

35. Engineer's Authority

The Engineer shall give all orders and directions contemplated under this contract and specifications, relative to the execution of the work and shall determine the amount, quality, acceptability, and fitness of the several kinds of work and materials which are to be paid for under this Contract and shall decide all

questions which may arise in relation to said work and the construction thereof at all times as the representative of the Owner. The Engineer's estimates and decisions shall be final and conclusive, except as herein otherwise expressly provided. In case any question shall arise between the parties hereto relative to said Contract, the determination or decision of the Engineer, as representative of the Owner, shall be a condition precedent to the right of the Contractor to receive any money or payment for work under this Contract affected in any manner or to any extent by such question; provided, however, the Engineer's decisions, unless he obtains prior approval from the Owner, shall not be binding upon the Owner. The Engineer's orders, directions, approvals, rejections, payment decisions, and any other communications to the contractor do not relieve the contractor from his full responsibility to meet all the requirements of this contract, observe all safety requirements, and comply with all laws. The Engineer will not be liable for any of the contractor's responsibilities in this contract.

36. Stated Allowances

The Contractor shall purchase the "Allowed Materials" as directed by the Owner on the basis of the lowest and best price. The cost of installation of the "Allowed Materials" shall be included in the applicable sections of the Contract Specifications covering this work.

37. Use of Premises and Removal of Debris

The Owner has secured right-of-way and easements, as shown on the Plans, to be occupied by the finished construction, with only such additional construction easement as shown for use of the Contractor in carrying out his work. The Contractor shall take proper measures to protect all property within all construction easements which might be injured by any process of construction; and in case of any injury or damage, he shall restore at his own expense the damaged property to a condition similar or equal to that existing before such injury or damage was done, or he shall make good such injury or damage in an acceptable manner.

The Contractor shall confine his haul routes to primary arteries. Damage to roads caused by the Contractor's equipment shall be repaired upon direction and in the manner prescribed by the Engineer.

The Contractor will sprinkle base on roads under construction and on detours as required to maintain sufficient moisture content in surface layer for dust control.

The Contractor may not employ the use of explosives on this project unless the Owner provides a Special Specification for the use of explosives and the Contractor adheres to all requirements of said Special Specifications.

The Contractor expressly undertakes at his own expense:

(a) to take every precaution against injuries to persons or damage to property;

(b) to store his apparatus, materials, supplies and equipment in such orderly fashion at the site of the work as will not unduly interfere with the progress of this work or the work of any other contractors;

(c) to place upon the work or any part thereof only such loads as are consistent with the safety of that portion of the work;

(d) to clean up frequently all refuse, rubbish, scrap materials, and debris caused by his operations, to the end that at all times the site of the work shall present a neat, orderly and workmanlike appearance;

(e) before final payment to remove all surplus material, false-work, temporary structures including foundations thereof, plant of any description and debris of every nature resulting from his operations, and to put the site on a neat, orderly condition;

(f) to effect all cutting, fitting or patching of his work required to make the same to conform to the plans and specifications and, except with the consent of the Engineer, not to cut or otherwise alter the work of

any other Contractor.

38. Quantities of Estimate

Wherever the estimated quantities or work to be done and materials to be furnished under this contract are shown in any of the documents including the proposal, they are given for use in comparing bids and the right is especially reserved except as herein otherwise specifically limited, to increase or diminish them as may be deemed reasonably necessary or desirable by the Owner to complete the work contemplated by this contract, and such increase or diminution shall in no way vitiate this contract, nor shall any such increase or diminution give cause for claims or liability for damages.

39. Land and Rights-of-Way

Prior to the start of construction, the Owner shall obtain all lands and right-of-way necessary for the carrying out and completion of work to be performed under this contract.

The Contractor shall provide at his own expense and without liability to the Owner any additional land access thereto not provided by the Owner which may be required for temporary construction facilities or for storage materials.

40. General Guaranty

Neither the final certificate of payment nor any provision in the Contract Documents, nor partial or entire occupancy of the premises by the Owner, shall constitute an acceptance of work not done in accordance with the Contract Documents or relieve the Contractor of liability in respect to any express warranties or responsibility for faulty materials or workmanship. The Contractor shall remedy any defects in the work and pay for any damage to other work resulting therefrom, which shall appear within a period of one year from the date of final acceptance of the work unless a longer period is specified. The Owner will give notice of observed defects with reasonable promptness.

The Contractor shall be responsible in notifying the Owner or Representative one month prior to the termination of the one year warranty period via Certified Mail. Should the Owner not receive the certified letter, the warranty period shall be extended on a month to month basis until receipt of the certified letter. The Owner will give prompt written notice of observed defects. The warranties and guarantees in the Texas Government Code shall be in addition to and not a limitation of any other remedies provided by the Contract Documents or by law. If the Contractor, after notice, fails to proceed promptly to comply with the terms of this guarantee, the Owner may have the work corrected and the Contractor and his surety shall be liable for all expenses incurred.

41. Conflicting Conditions

Any provision in any of the Contract Documents which may be in conflict or inconsistent with any of the paragraphs in these General Conditions shall be void to the extent of such conflict or inconstancy.

42. Notice and Service Thereof

Any notice to any Contractor from the Owner relative to any part of this contract shall be in writing and considered delivered and the service thereof completed, when said notice is posted, by certified or registered mail, to the said Contractor at his last given address, or delivered in person to the said Contractor or his authorized representative on the work.

43. Provisions Required by Law Deemed Inserted

Each and every provision of law and clause required by law to be inserted in this contract shall be deemed to be inserted herein and the contract shall be read and enforced as though it were included herein, and if through mistake or otherwise any such provision is not inserted, or is not correctly inserted, then upon the application of either party the contract shall forthwith be physically amended to make such insertion or

correction.

44. Other Prohibited Interests

No official of the Owner who is authorized in such capacity and on behalf of the Owner to negotiate, make, accept or approve, or to take part in negotiating, making, accepting, or approving any architectural, engineering, inspection, construction or material supply contract or any subcontract in connection with the construction of the project, shall become directly or indirectly interested personally in this contract or in any part hereof. No officer, employee, architect, attorney, engineer or inspector of or for the Owner who is authorized in such capacity and on behalf of the Owner to exercise any legislative, executive, supervisory or other similar functions in connection with the construction of the project, shall become directly or indirectly interested personally in this contract or in any part thereof, any material supply contract, subcontract, insurance contract, or any contract pertaining be the project.

45. Use and Occupancy Prior to Acceptance by Owner

The Contractor agrees to the use and occupancy of a portion or unit of the project before formal acceptance by the Owner, provided the Owner:

(a) Secures written consent of the Contractor except in the event, in the opinion of the Engineer, the Contractor is chargeable with unwarranted delay in final cleanup of punch list items or other contract requirements,

(b) Secures endorsement from the insurance carrier and consent of the surety permitting occupancy of the building or use of the project during the remaining period of construction, or,

(c) When the project consists of more than one building, and one of the buildings is occupied, secures permanent fire and extended coverage insurance, including a permit to complete construction. Consent of the surety must also be obtained.

46. Photographs of the Project

46.1 DEFINITIONS

A. Pre-construction Photographs: Photographs taken, in sufficient numbers and detail, prior to Date of Commencement of the Work, to show original construction site conditions.

B. Finished Photographs: Photographs taken by a professional photographer, near Date of Substantial Completion, before Owner's acceptance of the Work, and that are suitable for framing and for use in brochures or on the Internet.

46.2 SUMBITTALS

A. Format and Media. Digital photography or Film may be used. Submit electronic color photographs, unless otherwise specified.

1. Prints: Submit Pre-construction Photograph print in a three-hole plastic pocket or sleeve, bound in a three-ring notebook. Produce prints on photographic-quality paper. Minimum size for Pre- construction Photograph prints shall be 3-inches by 5-inches.

2. Film: Use 35 mm or larger color film. Submit negatives used to make submitted photographs, in 3-hole, 8.5 x 11 inch plastic sheets with sleeves for negatives.

3. Digital Photography: Use 2.1 mega pixel density or greater for photographs. Scanned photographs must equal or exceed 400 dots per inch when scanned from 8-inch by 10- inch prints. Submit digital photographic files on computer disks. Format disks for MS- DOS (Microsoft Disk Operating System) filing system and in JPEG (Joint Photographic Experts Group) format.

B. Submittal Quantities and Frequencies.

1. Pre-construction Photographs: submit two sets of Pre-construction Photographs prior to start of construction operations.

C. Labeling. Place a label on the back of each photographic print, applied so as to not show through on the front. Labels shall contain the following information:

1. Name of Project, address of Project and Project Number (if available).

2. Name and address of Contractor.

3. Date photograph was taken.

4. Location photo was taken from and short description of photo subject.

5. Name and address of professional photographer who took the photograph, if applicable.

D. Hand-deliver or transmit prints in standard photographic mailers marked "Photographs – Do Not Bend."

E. Photographic prints, negatives, photographic files, and disks become the property of the Owner. Do not publish photographs without written consent by the Owner.

46.3 QUALITY ASSURANCE

A. Contractor shall be responsible for the quality of and timely execution and submittal of photographs.

B. If required by the Special Conditions Finished Photographs, Contractor shall use a professional photographer, with five years minimum professional experience in the area. Contractor shall submit name, address, and credentials of professional photographer for Engineer's review and approval.

46.4 PRE-CONSTRUCTION PHOTOGRAPHS

A. Prior to commencement of construction operations, photograph the site to include initial construction corridor, detour routes, and staging or storage areas.

1. For line project with scheduled construction segments, take Preconstruction Photographs prior to commencement of work on each segment.

2. Video's, placed on DVD's of the roadway and or site, are required prior to working. The major haul routes to and from the site are required to show preexisting road conditions. The video must show enough detail of the sites to allow for comparison during and after the project.

B. Prepare Pre-construction Photographs as follows:

1. Show the following information on a non-reflective chalkboard placed within the picture frame:

a. Job number.

b. Project number.

c. Date and time photographs were taken (Automatic date/time in negative is acceptable).

d. Baseline station, direction of view (i.e. N, S, NW, etc.) and house number or street address and street name.

2. Pre-construction Photographs shall indicate condition of the following:

a. Esplanades and boulevards.

b. Yards (near side and far side of street).

c. House walks and sidewalks.

d. Curbs.

e. Areas between walks and curbs.

f. Particular features (e.g. yard lights, shrubs, fences, trees).

3. Show date photographs were taken on negatives.

C. Show the location of vantage points and direction of shots on a key plan of the site.

46.5 FINISHED PHOTOGRAPHS

A. Finished Photographs shall be "staged" and taken by a professional photographer to depict the most flattering images of a finished facility. Two vantage points, from which Finished Photographs will be taken, shall be agreed to in advance by the Owner and Engineer. Photographer shall consider lighting, time of day, height of eye, landscaping, and placement of vehicles, people, and other props in each picture. Filters and post-photography processing may be utilized to achieve a finished product acceptable to the Owner and Engineer.

47. Suspension of Work

Should the Owner be prevented or enjoined from preceding with either before or after the start of construction by reason of any litigation or other reason beyond the control of the Owner, the Contractor shall not be entitled to make or assert claim for damage by reason of said delay; but time for completion of the work will be extended to such reasonable time as the Owner may determine will compensate for time lost by such delay with such determination to be set forth in writing.

48. Underpayments of Wages or Salaries

In case of underpayment of wages by the Contractor or by any Subcontractor to laborers or mechanics employed by the Contractor or Subcontractor upon the work covered by this Contract, the Local Public Agency or Public Body in addition to such other rights as may be afforded it under this Contract shall withhold from the Contractor, out of any payments due the Contractor, so much thereof as the Local Public Agency or Public Body may consider necessary to pay such laborers or mechanics the full amount of wages required by this Contract. The amount withheld may be disbursed by the Local Public Agency or Public Body, for and on account of the Contractor or the Subcontractor (as may be appropriate), to the respective laborers or mechanics to whom the same is due or on their behalf to plans, funds, or programs for any type of fringe benefit prescribed in the applicable wage determination.

49. Overtime Compensation

(a) OVERTIME REQUIREMENTS: No Contractor or Subcontractor contracting for any part of the Contract work which may require or involve the employment of laborers or mechanics, including watchmen and guards, shall require or permit any laborer or mechanic in any work week in which he is employed on such work to work in excess of 8 hours in any calendar day or in excess of 40 hours in such work week unless such laborer or mechanic receives compensation at a rate not less than one and one-half times his basic rate of pay for all hours worked in excess of 8 hours in any calendar day or in excess of 40 hours in such work week, as the case may be.

(b) VIOLATION: Liability for unpaid wages liquidated damages. In the event of any violation of the clause set forth in paragraph (a), the Contractor and any Subcontractor responsible therefore shall be liable to any affected employee for his unpaid wages. In addition, such Contractor and Subcontractor

shall be liable to the United States for liquidated damages. Such liquidated damages shall be computed with respect to each individual laborer or mechanic employed in violations of the clause set forth in paragraph (a), in the sum of $10 for each calendar day on which such employee was required or permitted to work in excess of 8 hours or in excess of the standard work week of 40 hours without payment of the overtime wages required by the clause set forth in paragraph (a).

(c) WITHHOLDING FOR LIQUIDATED DAMAGES: The Local Public Agency or Public Body shall withhold or cause to be withheld, from any moneys payable on account or work performed by the Contractor or Subcontractor, such sums as may administratively be determined to be necessary to satisfy any liabilities of such Contractor or Subcontractor for liquidated damages as provided in the clause set forth in paragraph (b).

(d) SUBCONTRACTS: The Contractor shall insert in any subcontracts the clauses set forth in paragraphs (a), (b), and (c) of this Section and also a clause requiring the Subcontractors to include these clauses in any lower tier subcontracts which they may enter into, together with a clause requiring this insertion in any further subcontracts that may in turn be made.

50. Street Crossings

At street crossings and at other points of hazard, and where directed by the Owner, the Contractor shall provide and maintain suitable signs, barricades and lights as are necessary to direct traffic around work in progress and insure the safety of the public. The Contractor shall provide adequate flagmen, barricades, warning signs and lights for the project, or portion of the project, within which operations are being prosecuted in any one day or closed overnight. All stockpiles shall be adequately barricaded and lighted. Construction Inspectors, Maintenance Supervisors, Traffic Engineering Representatives and Management Personnel with the Public Works Division are authorized to stop all work in construction areas where non-compliance of traffic controls are observed, until they are corrected.

51. Coordination and Meetings

51.1. COORDINATION OF THE WORK

51.1.1. CONTRACTOR shall be solely responsible for coordination of all of the Work. CONTRACTOR shall supervise, direct and cooperate fully with all subcontractors, manufacturers, fabricators, suppliers, distributors, installers, testing agencies and all others whose services, materials or equipment are required to ensure completion of the Work within the Contract Time.

51.1.2. The CONTRACTOR shall cooperate fully with the OWNER, and its representatives, and all other Contractors employed on the work including utility service companies to effect proper coordination and progress to complete the project on schedule and in proper sequence. This coordination includes that necessary for the successful certification of the project as outlined in the contract documents.

51.2. CONTRACTOR COORDINATION

51.2.1. Coordinate scheduling, submittals, and work of various Specification sections to assure efficient and orderly sequence of Installation of interdependent construction elements.

51.2.2. Coordinate completion and cleanup of the Work prior to the Date of Substantial Completion and for portions of the Work designated for the Owner's partial occupancy.

51.2.3. Coordinate access to the site for correction of nonconforming work to minimize disruption of the Owner's activities where the Owner is in partial occupancy.

51.3. PRE-CONSTRUCTION MEETING

51.3.1. Owner or Engineer will schedule pre-construction meeting.

51.3.2. Attendance Required: Owner representative, Design Consultant, special consultants as required by the Owner, Contractor, and major Subcontractors.

51.3.3. Agenda:

51.3.3.1. Distribution of Contract documents.

51.3.3.2. Designation of personnel representing the Parties and Design Consultant.

51.3.3.3. Review of Insurance.

51.3.3.4. Discussion of formats for Schedule of Values and Construction Schedule.

51.3.3.5. Procedures and processing of Shop Drawings, substitutions, pay estimates or Applications for Payment, Requests for Information, Requests for Proposal, Modifications, Contract closeout, and other submittals.

51.3.3.6. Scheduling of the Work and coordination with other contractors.

51.3.3.7. Review of Subcontractors and Suppliers.

51.3.3.8. Procedures for testing.

51.3.3.9. Procedures for maintaining record documents.

51.4. SITE MOBILIZATION CONFERENCE

51.4.1. The Contractor will notify the Owner of the intended date to mobilize to the Site and the Owner's Representative will schedule a conference at the Project site prior to Contractor mobilization.

51.4.2. Attendance Required: Owner's Representatives, Design Consultant, special consultants, Superintendent, and major Subcontractors.

51.4.3. Agenda:

51.4.3.1. Use of premises by the Owner and Contractor.

51.4.3.2. Safety and first aid procedures.

51.4.3.3. Construction controls provided by the Owner.

51.4.3.4. Temporary Utilities.

51.4.3.5. Survey and layout.

51.4.3.6. Security and housekeeping procedures.

51.4.3.7. Field office requirements.

51.5. PROGRESS MEETINGS

51.5.1. Hold meetings at Project Field office or other location designated by Owner's Representative. Hold meetings at monthly intervals, or more frequently when directed by the

Owner's Representative.

51.5.2. Attendance Required: Superintendent, major Subcontractors, Owner representatives, Design Consultant and its subconsultants as appropriate for agenda topics for each meeting.

51.5.3. Owner and Engineer will make arrangements for meetings and for recording minutes.

51.5.4. Engineer will prepare the agenda and preside at meetings.

51.5.5. Provide required information and be prepared to discuss each agenda item.

51.5.6. Agenda:

51.5.6.1. Review minutes of previous meetings.

51.5.6.2. Review of construction schedule, pay estimates, cash flow curve, payroll and compliance submittals.

51.5.6.3. Field observations, problems, and necessary decisions.

51.5.6.4. Identification of problems that impede planned progress.

51.5.6.5. Review of submittal schedule and status of submittals.

51.5.6.6. Review of RFI and RFP status.

51.5.6.7. Modification status.

51.5.6.8. Review of off-site fabrication and delivery schedules.

51.5.6.9. Maintenance of Construction Schedule.

51.5.6.10. Corrective measures to regain Construction Schedule.

51.5.6.11. Planned progress during the succeeding work period.

51.5.6.12. Coordination of projected progress.

51.5.6.13. Maintenance of quality and work standards.

51.5.6.14. Effect of proposed Modifications on Construction Schedule and coordination.

51.5.6.15. Other items relating to the Work.

52. Texas Pollutant Discharge Elimination System (TPDES) Requirements

52.1 DEFINITIONS

A. Commencement of Construction Activities: The disturbance of soil associated with activities such as clearing, grading, and excavating, as well as other construction-related activities (e.g. mobilization, material storage and stockpile, lay down yard, demolition).

B. Construction General Permit: Documentation to be prepared and signed by Contractor before conducting construction operations, in accordance with the Texas Pollutant Discharge Elimination System (TPDES) Construction General Permit Number TXR150000 issued March 5, 2013 (the Construction General Permit).

C. Large Construction Activity: Project that:

1. Disturbs 5 acres or more, or

2. Disturbs less than 5 acres but is part of a larger common plan of development that will disturb 5 acres or more of land.

B. Small Construction Activity: Project that:

1. Disturbs 1 or more acres but less than 5 acres, or

2. Disturbs less than 1 acre but is part of a larger common plan of development that will ultimately disturb 1 or more acres but less than 5 acres.

C. Municipal Separate Storm Sewer System (MS4): Operator of storm sewer systems involved in Construction activities or receiving runoff from areas disturbed by Construction activities.

D. TPDES Operator: The person or persons who have day-to-day operational control of the construction activities which are necessary to ensure compliance with the SW3P for the site or other Construction General Permit conditions.

52.2 SITE SPECIFIC STORM WATER POLLUTION PREVENTION PLAN (SW3P)

A. Implement a Storm Water Pollution Prevention Plan (SW3P) in accordance with the contract documents and the SW3P provided by the Engineer. If conflicts exist between the Construction General Permit and the SW3P, the more stringent requirements shall apply.

B. Update or revise the SW3P as needed during the construction following Part III, Section E of the Construction General Permit.

C. Submit the SW3P and any updates or revisions to the Engineer for review and address comments prior to commencing, or continuing, construction activities.

D. The Engineer may require Contractor to install storm water pollution prevention measures during construction in addition to those required under the approved Storm Water Pollution Prevention Plan. Contractor shall remain solely responsible for complying with all Local, State and Federal Requirements.

E. In the event of conflict between the specified requirements and storm water pollution control laws, rules, or regulations, or other Local, State, or Federal agencies, the more restrictive laws, rules or regulations shall apply.

52.3 NOTICE OF INTENT FOR LARGE CONSTRUCTION ACTIVITY

A. Complete, sign, and date TCEQ Form 20022 Notice of Intent (NOI) for Storm Water Discharges Associated with Construction Activity under the TPDES Construction General Permit (TXR150000), which can be found on the TCEQ website (http://www.tceq.texas.gov/assets/public/permitting/stormwater/txr150000.pdf).

B. Submit the Notice of Intent by one of the following methods:

1. Submit online at TCEQ ePermits (https://www6.tceq.texas.gov/steers/) and Contractor is to pay the current application fee (Contractor to verify current fee). Transmit a copy of the electronic certificate provided by TCEQ to the Engineer.

2. Submit a check (paid by Contractor) for the current application fee (contractor to verify the fee) and completed TCEQ Form 20022 to the TCEQ. Transmit a copy of the check and

completed form to the Engineer.

C. The Engineer will complete a separate Owner's copy of TCEQ Form 20022 for NOI, and will submit Notice, along with application fee (paid by Owner), to the TCEQ.

D. Submission of the NOI form by Contractor to TCEQ and MS4 Operator is required a minimum of 7 days before Commencement of Construction Activities.

52.4 CONSTRUCTION SITE NOTICE FOR SMALL CONSTRUCTION ACTIVITY

A. Complete, sign, and date the Construction Site Notice, per TPDES General Permit (TXR150000).

B. Transmit the signed Construction Site Notice to the Engineer at least 7 days prior to Commencement of Construction Activity.

52.5 CERTIFICATION REQUIREMENTS

A. Contractor shall fill out TPDES Operator's Information form, per TPDES General Permit (TXR150000), including Contractor's name, address, and telephone number and the names of persons or firms responsible for maintenance and inspection of erosion and sediment control measures. Use multiple copies as required to document full information.

B. Contractor and Subcontractors shall sign and date the Contactor's/Subcontractor's Certification for TPDES Permitting, per TPDES General Permit (TXR150000). Include this certification with other project certification forms.

C. Contractor shall submit properly completed certification forms to the Engineer for review before beginning construction operations.

D. Conduct inspections in accordance with TCEQ requirements. Ensure persons or firms responsible for maintenance and inspection of erosion and sediment control measures read, complete, sign, and date the Erosion Control Contractor's Certification for Inspection and Maintenance.

E. Contractor shall maintain a detailed site map indicating current areas of soil disturbance and locations of all pollution prevention measures associated with construction activity on the project, and the date of the last inspection for each pollution prevention measure on-site, with the date of the last rainfall event.

52.6 RETENTION OF RECORDS

Contractor shall keep a copy of this document and the SW3P in a readily accessible location at the construction site from Commencement of Construction Activity until submission of the Notice of Termination (NOT) for Storm Water Discharges Associated with Construction Activity under TPDES Construction General Permit (TXR150000). Contractors with day-to-day operational control over SW3P implementation shall have a copy of the SW3P available at a central location, on-site, for the use of all operators and those identified as having responsibilities under the SW3P. Upon submission of the NOT, submit all required forms and a copy of the SW3P with all revisions to the Engineer.

52.7 REQUIRED NOTICES

A. Post the following notices, in a clearly legible manner protected from rain and fading due to sun exposure, from the effective date of the SW3P until the date of final site stabilization as defined in the Construction General Permit:

B. Post the TPDES permit number for Large Construction Activity or a signed TCEQ Construction Site Notice for Small Construction Activity. Signed copies of the Contractor's NOI must also be posted.

C. Post notices near the main entrance of the construction site in a prominent place for public viewing. Post name and telephone number of Contractor's local contact person, brief project description and location of the SW3P.

D. If posting near a main entrance is not feasible due to safety concerns, coordinate posting of notice with the Engineer to conform to requirements of the Construction General Permit.

E. If Project is a linear construction project (e.g., road, utilities, etc.), post notice in a publicly accessible location near active construction. Move notice as necessary.

F. Post a notice to equipment and vehicles operators, instructing them to stop, check, and clean tires of debris and mud before driving onto traffic lanes. Post at each stabilized construction exit area.

G. Post a notice of waste disposal procedures in a readily visible location on-site.

52.8 MAINTENANCE

A. Maintain pollution prevention control measures in full working order at all times during construction. This shall include any necessary repair or replacement of items which have become damaged, ineffective or reached their capacity. Remove sediment and other pollutants which accumulate in pollution control measures as necessary to maintain the intended design efficiency for the pollution prevention measure.

B. Dispose properly of trash, debris, and other pollutants.

C. Place sediment material in approved earth spoil areas or return the sediment material to the area from which it eroded.

D. Maintain pollution prevention structures and procedures until the site achieves final stabilization. Unless more stringently defined by Local, State or Federal requirements, final stabilization is defined as achieving 70 percent of background vegetative cover, or placement of permanent cover, such as asphalt or concrete.

E. Upon completion of construction and achievement of final stabilization, properly remove the temporary pollution prevention measures and complete the area as indicated. Pollution prevention control measures made of organic materials designed to degrade naturally in place will not require removal unless specifically required by the Owner or Engineer.

52.9 ON-SITE WASTE MATERIAL STORAGE

A. On-site waste material storage shall be self-contained and shall satisfy appropriate local, state, and federal rules and regulations.

B. Prepare list of waste material to be stored on-site. Update list as necessary to include up-to- date information. Keep a copy of updated list with the SW3P.

C. Prepare description of measures to reduce pollutants generated from on-site storage. Include storage practices necessary to minimize exposure of materials to storm water, and spill prevention and response measures consistent with pollution prevention measures. Keep a copy of the description with the SW3P.

52.10 NOTICE OF TERMINATION

A. Submit a NOT, per TPDES General Permit (TXR150000), to the Engineer within 10 days after:

1. Final stabilization has been achieved on all portions of the site that are the responsibility of the Contractor; or

2. Another operator has assumed control over all areas of the site that have not been stabilized; and

3. All silt fences and other pollution prevention measures have either been removed or are scheduled to be removed as defined in the SW3P, or transferred to a new operator, if the new operator has sought permit coverage.

B. The Engineer will complete NOT and submit Contractor's notices to the TCEQ and MS4 entities.

52.11 SCHEDULES

A. Include with the SW3P submittal a schedule to the Engineer for accomplishment of temporary and permanent erosion control work in connection with required clearing and grubbing, grading, construction, and paving. Include a proposed method of erosion and dust control on haul roads and borrow pits and a plan for disposal of waste materials in the submittal.

SPECIFICATIONS

ITEM 4.1.03

PROJECT ELECTRICAL

1. Description

This item covers electrical and instrumentation equipment, materials, and installation for the Project.

2. Intent of Contract Documents.

All Item 4.1.03 requirements are part of the Specifications, as defined under Item 1.20 of the General Conditions; moreover, Item 4.1.03, requirements shall be interpreted relative to other sections of the Contract Documents. The drawings and specifications of other parts of this contract shall be complied with in every respect, and the absence of duplication of details in two different sections of the documents shall not relieve the responsibility or be used as a basis for additional compensation due to omission of details of other paragraphs from the electrical documents.

Contractor shall furnish all work, tools, superintendence, material equipment and operations necessary to provide for a complete and workable electrical system as defined by the Contract Documents. Prior to bidding, Contractor shall be responsible for visiting the sites, checking the existing conditions, ascertaining the conditions to be met for installing the work and adjusting bid accordingly.

It is the intent of the specifications and drawings that upon completion and testing of the electrical work, the entire electrical system shall be complete and shall be in a finished, workable condition. Allow in bid for this condition to fulfill the requirements for satisfactory operation of the facility in the manner intended. Any discrepancies or omissions which prevent such workability shall be reported with bid.

All work that may be called for in the specifications, but not shown on the drawings; or,

all work that may be shown on the drawings but not called for in the specifications, shall be performed by the Contractor as if described in both. Should work be required which is not set forth in either document, but which work is nevertheless required for fulfilling of the intent thereof; then, the Contractor shall perform all work as fully as if it were specifically set forth in the Contract Documents

The definition of terms used throughout the Contract Documents shall be as specified by the following agencies:

1. Underwriters Laboratories
2. National Electrical Manufacturers Association
3. Insulation Power Cable Engineers Association
4. National Electrical Code
5. National Fire Protection Association

The use of the terms: "as (or where) indicated"; "as (or where) scheduled"; "as (or where) specified"; or "as (or where) shown" shall be taken to mean that the reference is made to the Contract Documents.

The use of the words "furnish", "provide", or "install" shall be taken to mean that the item or facility is to be both furnished and installed unless stated to the contrary that the item or facility is to be either furnished under another Item or under Contract; furnished under this Item and installed under another Item or under another Contract; or, furnished and installed under another Item or under another Contract.

3. Permits, Codes and Utilities.

Secure all permits, licenses, and inspection as required by all authorities having jurisdiction. Give all notices and comply with all laws, ordinances, rules, regulations and contract requirements bearing on the work.

In the absence of code enforcement authorities, the interpretation of the National Electrical Code shall be made by the Engineer.

The minimum requirements of the electrical system installation shall conform to the latest edition of the National Electrical Code as well as state and local codes.

Codes and ordinances having jurisdiction over the work shall serve as minimum requirements; but if the Contract Documents indicate requirements which are in excess of those minimum requirements, then the requirements of the Contract Documents shall be followed. Should there be any conflicts between the Contract Documents and codes, or any ordinances, report these with bid.

Determine the exact requirements for the electric utility service connections and metering facilities as set forth by TU Electric and pay for and perform all work as required by those utilities.

4. Guarantee.

Unless otherwise specified, the Contractor shall guarantee his equipment against defective materials and workmanship for a period of one (1) year after acceptance of the project by the Owner.

5. Standards.

All materials and equipment shall conform to the requirements of the Contract Documents. They shall be new, free from defects, and they shall conform to the following standards where the organizations have set standards:

1. Underwriters Laboratories, Inc. (UL)
2. National Electrical Manufacturers Association (NEMA)
3. American National Standards Institute (ANSI)
4. Insulated Cable Engineers Association (ICEA)
5. Instrument Society of America (ISA)
6. American Water Works Association (AWWA)

7. National Electrical Code (NEC)

All material and equipment, of the same class, shall be supplied by the same manufacturer unless specified to the contrary.

All products shall bear UL labels where standards have been set for listing.

The Contractor, any manufacturer and/or his agent, who provides a product for this project shall be bound by the terms and conditions of the Contract Documents and shall agree to warrant and to be liable for the merchantability and fitness of his product to the applications to which his product is applied under the Contract Documents.

6. Shop Drawings.

Shop drawings shall be taken to mean detailed drawings with dimensions, schedules, weights, capacities, installation details, and pertinent information that will be needed to describe the material or equipment in detail.

Submittals shall be taken to mean catalog cuts, general descriptive information, catalog numbers and manufacturer's name.

Submit for review in sextuplicate within sixty (60) days after notice to proceed, all shop drawings and submittals as hereinafter called for. If shop drawings and submittals are not received in sixty (60) days the Owner's Representative reserves the right to go directly to the manufacturer for the information and any expense incurred shall be borne by the Contractor.

Review of submittals or shop drawings shall not remove the responsibility for furnishing materials or equipment of proper dimensions, quantity and quality; nor will such review remove the responsibility for error in the shop drawings or submittals.

Failure to process submittals or shop drawings on any item and/or items specified shall

make the Contractor responsible for the suitability of the item and/or items, even though the item and/or items installed appear to comply with the Contract Documents.

The Contractor shall assume all costs and liabilities which may result from the ordering of any material or equipment prior to the review of the shop drawings or submittals, and no work shall be done until the shop drawings or submittals have been reviewed. In case of correction or rejection; resubmit until such time as they are accepted by the Owner's Representative and such procedures will not be cause for delay. After final review, supply up to six (6) copies if requested.

Submittals and shop drawings shall be compiled from the manufacturer's latest product data. Should there be any conflicts between this data and the Contract Documents, report this information for each submittal and/or shop drawing.

Shop drawings and submittals will be returned unchecked if the specific items proposed are not clearly marked, or if the general Contractor's approval stamp is omitted. When requested, furnish samples of materials for acceptance review. If a sample has been reviewed and accepted, then that item of material or equipment installed on the job shall be equal in quality to the sample; if it is found that the installed item is not equal, then replace all such items with the accepted sample equivalent.

7. Acceptance and Substitution.

All manufacturers named are a basis as a standard of quality and substitutions of any equal product may be considered for acceptance. The judgement of equality of product substitution shall be made by the Engineer.

Except as otherwise specified, substitutions after award of contract shall be made only within sixty (60) days after the notice to proceed. Furnish all required supporting data. The submittal of substitutions for review shall not be cause of time extensions.

Where substitutions are offered, the substituted product shall meet the manufacturer's current catalog literature, as well as meeting the details and intent of the Contract Documents.

The details on the drawings and the requirements of the specifications are based on the first listed item of material or equipment; if any other than the first listed materials or equipment is furnished, then assume responsibility for the correct function, operation and accommodation of the substituted item. In the event of misfits or changes in work required, either in this Item or other Items of the Contract, or in both, the Contractor shall bear all costs in connection with all changes arising out of the use of other than the first listed product specified.

Substitutions of products specified under another Item may occur. The Contractor shall make necessary adjustments and additions to work to accommodate those substitutions. Such adjustments and additions shall be performed in compliance with these specifications at no additional charge.

8. Excavation.

Perform all excavating and backfilling necessary for the installation of the work. This shall include shoring and pumping in ditches to keep them dry until the work in question has been installed. All shoring required to protect the excavation and safeguard employees shall be properly performed.

All excavations shall be made to the proper depth, with allowances made for floors, slabs, forms, beams, piping, finished grades, etc. Trenches for underground conduits shall be well compacted before conduits are installed. All backfilling shall be made with selected soil, free of rocks and debris and shall be pneumatically tamped in six (6") inch layers to secure a field density ratio of 90%.

All excavated material not suitable and not used in the backfill shall be removed to the

on-site disposal area. Area shall be as directed by the Owner's Project Representative.

Field check and verify the locations of all underground utilities prior to any excavating. Avoid disturbing these as far as possible. In the event existing utilities are broken into or damaged, they shall be repaired so as to make their operation equal to that before the trenching was started.

Where the excavation requires the opening of existing walks, drives, or other existing pavement, these facilities shall be cut as required to install new lines and to make connections to existing lines. The sizes of the cut shall be held to a minimum consistent with the work to be installed. After installation of new work is completed and the excavation has been backfilled in accordance with above, repair existing walks, drives or other existing pavement to match existing installation.

9. Cutting and Patching.

Cutting and patching required under this section shall be done in a neat workmanlike manner. Cutting lines shall be uniform and smooth.

Use concrete saws for large cuts in concrete and use core drills for small round cuts in concrete.

Where openings are cut through masonry walls, provide lintel or other structural supports to protect the remaining masonry. Adequate support shall be provided during the cutting operation to prevent damage to masonry.

Where large openings are cut through metal surfaces, attach metal angles around the opening.

Patch concrete openings that are to be filled with non-shrinking cementing compound. Finished concrete patching shall be troweled smooth and shall be uniform with surrounding

surfaces.

10. Waterproofing.

Provide waterproof flashing for each penetration of exterior walls and roofs.

Flashing for conduit penetrations through built-up roofs shall be made with pitch pans filled full with pitch. Conduit penetrations through poured concrete roofs shall be made with sleeves and annulus caulked.

Penetrations through walls at below ground elevations shall be waterproofed by conduit sealing fittings or other methods as indicated.

Interiors of raceways that are run into below-ground installations shall have waterstops installed to prevent water from entering into installations through the insides of the raceways.

11. Construction Requirements.

Except where specifically noted or shown, the locations and elevations of equipment are approximate and are subject to small revisions as may prove necessary or desirable at the time the work is installed. Final locations shall be confirmed with the Engineer in advance of construction. Confirmed locations shall be made for the following:

1. Distribution equipment
2. Light poles
3. Rough-ins and connections for equipment
4. Safety switches
5. Process Sensors and Devices

Where equipment is being furnished under another Item, the Contractor shall obtain an accepted drawing that will show exact dimensions of required locations of connections. Install

the required facilities to the requirements of the accepted drawings, except where higher standards have been specified.

All work shall be done in the best and most workmanlike manner by qualified, careful electricians who are skilled in their trade. The standards of work required throughout shall be of the first class only and electricians whose work is unsatisfactory to the Engineer or Owner shall be instantly dismissed from the work upon written notice from the Engineer or the Owner.

Unless shown in detail, the drawings are diagrammatic and do not give exact details as to elevations and routing of conduits, nor do they show all offsets and fittings; nevertheless, install the raceway system to conform to the structural and mechanical conditions of the construction.

The detailed Plans and Specifications will not necessarily distinguish all circuits required for the project as certain special systems or equipment are frequently covered by functional descriptions or general circuit information that is given to convey the intent. In any event, it shall be the Contractor's responsibility to coordinate between the respective suppliers and subcontractors as necessary to assure the furnishing of all components necessary for a complete and operable system.

Holes for raceway penetration into sheet metal cabinets and boxes shall be accurately made with knockout punch. Cutting openings with a torch or other device that produces a jagged, rough cut will not be acceptable.

Cabling inside equipment shall be carefully routed, trained, and laced. Cables so placed that they obstruct equipment devices and openings will not be acceptable.

Equipment shall be set level, plumb and square with building lines. Supporting devices installed shall be set and so braced that equipment is held in a rigid, tight fitting manner.

12. Equipment Protection.

Provide suitable protection for all equipment, work and property against damage during construction.

Assume full responsibility for material and equipment stored at the site. Follow manufacturer's recommendations for storage handling, and protection of equipment.

Conduit openings shall be closed with caps or plugs during installation. All outlet boxes and cabinets shall be kept free of concrete, plaster, dirt and debris.

Equipment shall be covered and tightly sealed against entrance of dust, dirt and moisture.

All stored equipment shall be protected against moisture and dirt absorption by a suitable covering. Also, maintain heat inside the covering by means of adequate heat source that shall maintain minimum of 60°F. Interior of equipment shall be kept clean and dry prior to energizing. All equipment shall be protected against freezing, flooding, corrosion or other forms of damage.

13. Construction With Work Under Other Paragraphs.

Cooperate with all other trades so as to facilitate the general progress of the work. Allow all other trades every reasonable opportunity for the installation of their work and the storage of their materials.

The work under this section shall follow the general building construction closely. Set all pipe sleeves, inserts, etc., and see that openings for cases, pipes, etc., are provided before concrete is placed or masonry installed.

Work with other trades in determining exact locations of outlets, conduits, fixtures, and

pieces of equipment to avoid interference with lines as required to maintain proper installation of other work.

Make such progress in work that will not delay the work of other trades. Schedule the work so that completion dates as established by the Engineer are met. Furnish sufficient labor or work overtime to accomplish these requirements if directed to do so.

14. Installation and Connection of Work Under Another Item.

Verify the electrical capacities of all motors and electrical equipment furnished under other paragraphs, or furnished by the Owner, and request wiring information from the Engineer if wiring requirements are different from that specified under this Section. Do not make rough-ins until equipment verification has been received. Allow in bid to completely connect and to make operational each and every item of electrical equipment furnished under other Items.

Install all motors, controllers, terminal boxes, pilot devices, and miscellaneous items of electrical equipment that are not integrally mounted with the equipment furnished under other Items. All such equipment shall be securely mounted and adequately supported in a neat and workmanlike manner and square with the building lines.

15. Change Order.

In the event change orders are prepared, they shall each be itemized as to quantities in addition to labor, materials, and overhead.

Pricing for change orders shall be done in compliance with the latest edition of "Means Electrical Cost Data" and pricing shall not exceed values tabulated therein.

16. Labels and Nameplates.

All instruments shall be identified with device description and instrument tag number.

Nameplates shall be constructed of laminated phenolic material and shall have beveled edges. Nameplates shall be black background with white engraved ½" high vertical block letters unless otherwise indicated. Nameplates shall be attached using 3M Company #4432 foam tape. Minimum size shall be 1" high x 3/32" thick. The length shall be determined by the lettering contained.

Warning labels bearing "CAUTION" and "DANGER" wording shall be as described above except with red background and white engraving.

Label and nameplates shall be submitted for review by Engineer. Submittal shall show nameplate size, letter size, and lettering. Provide a sample of typical labels. Each label and nameplate shall have the following additional information: abbreviated equipment description, location site number and equipment sequence number. Each item of electrical equipment with internal voltages above 24V shall have hazardous voltage warning label, self-adhesive waterproof type applied to each cabinet door.

17. Clean-Up.

Remove all temporary labels, dirt, paint, grease, and stains from all exposed equipment. Upon completion of work, clean equipment and the entire installation so as to present a first class job suitable for operation. No loose parts or scraps of equipment shall be left on the premises.

Equipment paint scars shall be repaired with paint kit supplied by the equipment manufacturer or with approved paint.

Clean interiors of each instrument enclosure. At completion of work all enclosures shall be free from dust, dirt and debris.

18. Tests.

Test all electrical systems and repair or replace all defective work. Make all necessary adjustments to the systems and instruct the Owner's personnel in the proper operation of the system.

Make all circuit breaker and protective relay adjustments and settings.

Make the following minimum tests and checks prior to energizing the electrical equipment:

1. Check all wire and cable terminations for tightness.

2. Test all wiring as specified herein.

3. Test grounding system as specified.

4. Set all transformer taps as required to obtain the proper secondary voltage.

5. Carefully check all interlocking, control and instrumentation wiring for each system to ascertain that the system will function properly as indicated by schematics, wiring diagrams, or as specified herein.

6. Mechanical inspection of all low voltage circuit breakers, disconnect switches, motor starters, control equipment, etc.. for proper operation.

7. Provide all instruments and equipment required for the above tests.

19. Record Drawings.

At the start and during the progress of the job, keep one separate set of blue-line prints for making construction notes and mark-ups.

Record all deviations from the Contract Documents.

Submit a set of marked-up drawings for review.

20. Operations and Maintenance Manuals.

Six weeks prior to the completion of the project, compile an Operations and Maintenance Manual on each item of equipment. These manuals shall include detailed instructions and maintenance as well as spare parts lists.

Submit seven copies for review.

21. Raceways

This section shall include raceways, enclosures, supporting devices ancillary fittings and appurtenances. Furnish and install the complete raceway systems as shown on the drawings and as specified herein.

Raceway is a broad-scope term that shall be defined by the National Electrical Code under Article 100.

Process catalog submittals for the following:

1. Conduit
2. Liquid-tight Flexible Conduit
3. Liquid-tight Fittings
4. Conduit Bushings
5. Conduit Bodies
6. Conduit Sealing Fittings
7. Expansion Fittings
8. Cast Metal Boxes
9. Supporting Devices

Rigid metallic steel conduit shall be hot-dip galvanized inside and outside and over threads. All such conduit shall comply with U.L. Standard UL-6, Federal Specification WWC-581-D, ANSI C80.1, and NEMA RN1-1980. Furnish Triangle, Republic or equal.

Rigid metallic aluminum conduit shall be manufactured of 6063 alloy, T-1 temper, with no more than 0.02% copper content. All conduit couplings shall be threaded aluminum. All such conduit shall be listed with UL and comply with UL-6 and ANSI C80.5. Aluminum conduit shall be EASCO, VAW, or equal.

Rigid metallic steel conduit shall be hot-dip galvanized inside and outside and over threads. All such conduit shall comply with U.L. Standard UL-6, Federal Specification WWC-581-D, ANSI C90.1, and NEMA RN1-1980. Furnish Triangle, Wheatland, or equal.

Plastic coated rigid steel conduit shall consist of rigid steel body that complies with above specifications for rigid metallic steel conduit, plus conduit shall have 40 mil thick heat-fused PVC over outside and 2 mil coat of fully catalyzed phenolic inside. The inside coat shall have the chemical resistance of the outer coating and shall not dissolve in lacquer thinner. All couplings shall be equipped with PVC sleeves that extend one pipe diameter or 2", whichever is less, beyond the end of the coupling. All plastic coated conduit shall conform to

NEMA Standard #RNI-1974 (Type A) and such conduit shall be Robroy "Plastibond Red", or equal.

Non-metallic rigid conduit shall be Schedule 40 PVC. Such conduit shall be UL listed for 90 degrees C and shall conform to NEMA TC-2 and UL-651 standards. Furnish Carlon, Certainteed, or equal. Furnish manufacturer's approved solvent for joining couplings.

Liquid-tight flexible conduit shall consist of hot-dipped galvanized, flexible interlocking steel core with thermoplastic cover, integral copper ground wire (through 1-1/4" trade size) and shall be OZ/Gedney "Flexi-Guard", or equal.

22. Conduit Fittings

NEMA 4 locknuts for rigid metallic conduit shall consist of galvanized steel body with neoprene sealing ring. Furnish Crouse- Hinds, T&B, or equal.

NEMA 1 locknuts for rigid metallic conduits shall be galvanized steel for use with galvanized steel conduit and hardened aluminum for use with aluminum conduit.

Conduit field-applied hubs for sheet metal enclosures shall be aluminum body with recessed neoprene sealing ring, threaded NPT insert, and shall be, T&B 370 AL series, or equal products by OZ/Gedney.

Conduit hubs for non-metallic enclosures shall be fiberglass polyester reinforced with galvanized steel core, complete with locknut and grounding bushing. All such hubs shall be Crouse-Hinds Type NHU, or equal.

Rigid metallic conduit chase nipples, split couplings, slip fittings, unions, reducers, and enlargers, shall be hot-dip or mechanically galvanized malleable iron.

Rigid metallic conduit short els and long els shall be hot-dip galvanized malleable iron with NPT threaded hubs and male ends. Throats shall be smooth and free from burrs. All such fittings shall be OZ/Gedney Type "9" Series, Appleton, or equal.

Rigid metallic conduit split couplings shall have threaded body with split tightening shelves with neoprene sandwich. Furnish malleable iron mechanically galvanized body. Such fittings shall be OZ type "SSP", or equal.

Rigid metallic conduit grounding bushings shall be aluminum body with threaded hub, bakelite insulated throat, and tin-plated copper ground lug. Furnish OZ/Gedney type ABLG, or equal.

Liquid-tight flexible conduit fittings shall be hot-dip galvanized steel body with internal locking ring and ground cone plus external ground wire fitting. Furnish straight or angle connectors as required. All such connectors shall be OZ/Gedney 4Q series, or equal.

Rigid metallic conduit expansion fittings shall consist of metallic barrel joined to hubs at each end. One hub shall be threaded to barrel and other hub shall have slip fit to allow up to four (4") inches of conduit lateral movement. Provide external bonding jumper for each expansion joint. Furnish Crouse-Hinds type "XJ", OZ Type "AX", or equal.

Conduit waterstops for sealing inside of conduit runs shall consist of aluminum pressure discs with sandwiched neoprene seal and with 316 stainless steel hardware. Furnish OZ/Gedney type "CS" series products, as indicated.

23. Conduit Bodies and Boxes

Conduit bodies such as "C", "LB", "T" and the like pulling fittings shall be zinc coated with malleable iron or aluminum (material shall match conduit). Covers for damp and/or wet location use shall be gasketed cast metal with "wedge-nut" clamps. Covers for dry locations shall be cast aluminum and hardware shall be 316 stainless steel. All covers shall be equipped

with clamp type clevises. Furnish Crouse-Hinds Form 7, or Appleton Form "FM7" products.

Conduit bodies such as "GUA", "GUAT", "GUAL", and the like pulling/splicing fittings shall be cast aluminum with threaded cast aluminum covers. All such conduit bodies shall be Killark "GE" series, or equal products by Crouse-Hinds or Appleton.

Cast metal outlet boxes, pullboxes, and junction boxes whose volume is smaller than 100 cubic inches, and cast metal device boxes, shall be sand-cast, copper-free aluminum or zinc coated sand-cast malleable iron. All boxes shall have threaded hubs. Furnish Crouse-Hinds "FD" style condulets, Appleton "FD" style Unilets, or equal.

Covers for cast metal boxes shall be gasketed cast metal covers with 316 stainless steel screws and shall be suitable for use in wet or damp locations.

24. Pull and Junction Boxes

Pullboxes and junction boxes whose volume is less than 100 cubic inches shall be furnished as specified hereinbefore except where sheet metal type is shown, in which cases, furnish such sheet metal enclosures in NEMA 4X 304 stainless steel construction with gasketed covers of same material.

Conduit bodies such as "GUA", "GUAT", "GUAL", and the like pulling/splicing fittings shall be cast aluminum with threaded cast aluminum covers. All such conduit bodies shall be Killark "GE" series, or equal products by Crouse-Hinds or Appleton.

Cast metal outlet boxes, pullboxes, and junction boxes whose volume is smaller than 100 cubic inches, and cast metal device boxes, shall be sand-cast, copper-free aluminum or zinc coated sand-cast malleable iron. All boxes shall have threaded hubs. Furnish Crouse-Hinds "FD" style condulets, Appleton "FD" style Unilets, or equal.

Covers for cast metal boxes shall be gasketed cast metal covers with 316 stainless steel

screws and shall be suitable for use in wet or damp locations.

24. Pull and Junction Boxes

Pullboxes and junction boxes whose volume is less than 100 cubic inches shall be furnished as specified hereinbefore except where sheet metal type is shown, in which cases, furnish such sheet metal enclosures in NEMA 4X 304 stainless steel construction with gasketed covers of same material.

Pullboxes and junction boxes whose volume is 100 cubic inches and greater shall be NEMA 4X 304 grade stainless steel type with gasketed stainless steel covers. Provide print pocket and interior back panel for mounting of terminal strips where terminal strips are called for on the drawings. Sheet metal boxes shall be as manufactured by Hoffman or equal.

Covers for sheetmetal pullboxes and junction boxes over 100 cubic inches (and for smaller sized where shown) shall have hinged doors. All hardware shall be stainless steel.

Cast metal junction boxes shall be cast aluminum type with gasketed, cast metal covers and with stainless steel cover screws.

25. Cabinet Labels and Nameplates

Voltage warning labels for cabinets shall be waterproof vinyl strips with adhesive back and shall have "DANGER (VOLTAGE) - DISCONNECT ALL SOURCES OF POWER BEFORE ENTERING". Letters shall be highly visible red color on white background.

Install voltage warning nameplate for the existing power transducer cabinet. The nameplate shall be engraved with white letters on a red background. The sign shall read "DANGER - DO NOT OPEN CIRCUIT CURRENT TRANSFORMER SECONDARY CIRCUITS. DISCONNECT ALL SOURCES OF POWER BEFORE ENTERING CABINET". The letters shall be at least 1/4" stroke with the "DANGER" letters at least ½" stroke.

26. Conduit and Box Supporting Devices

Mounting hardware, nuts, bolts, lockwashers, and washers, shall be Grade 304 stainless steel.

Unless otherwise indicated, channel framing and supporting devices shall be manufactured of ASTM 6063, TO6 grade aluminum; 1-5/8" wide x 3-1/4" deep (double opening type). Clamp nuts for use with channels shall be grade 304 stainless steel.

Where indicated, furnish grade 304 stainless steel slotted channel members 1-5/8" wide x 1-5/8" deep or 1 5/8" x 3 1/4" deep, double- faced type. All hardware and conduit clamps shall be grade 316 stainless steel.

Conduit clamp supports for terminating conduits onto cable trays shall be mechanically galvanized malleable iron with adjustable angle clamp. Fittings shall be provided with 316 stainless steel hardware. Furnish OZ/Gedney type CTC products.

All such channel members and fittments shall be B-Line, Unistrut or equal.

Conduit straps, and associated nuts, lockwashers and bolts for use with channels shall be 304 stainless steel with 316 stainless steel hardware. Furnish B-Line products or equal.

After-set concrete inserts (drilled expansion shields "D.E.S.") shall consist of two types. For anchors to accommodate 5/16" diameter bolts and smaller, provide HILTI "HDI" series 304 stainless steel anchors. For anchors to accommodate 3/8" diameter and larger bolts, provide HILTI "HVA" series with 316 stainless steel threaded inserts.

Hanger rod shall be 3/8" minimum diameter Type 304 stainless steel all-thread.

Nest-back or clamp-back conduit supports shall be two-piece hot- dip galvanized

malleable iron devices. Furnish Crouse-Hinds "MW+CB", OZ/Gedney 140NG Series, or equal.

One-hole conduit clamps shall be hot-dip galvanized malleable iron type, Crouse-Hinds Type "MW", T&B 1270/1280 Series, OZ/Gedney "14G" Series, or equal cast aluminum products.

Conduit beam clamps shall be hot-dip galvanized malleable iron and shall be as follows:

Right Angle - OZ/Gedney Type "UBCG", or equal.

Parallel - OZ/Gedney Type "UPCG", or equal.

Edge - OZ/Gedney Type "UECG", or equal.

Hanger rod beam clamps shall be clamp type with hardened steel, bolt, Steel City "500" Series, Crouse-Hinds type "MW", or equal. Furnish swivel stud for each rod make-up.

Conduit "J" hangers shall consist of steel straddle with detachable bolt. Finish shall be electro-galvanized. Furnish Kindorf type "C-149", Unistrut "J-1200" Series, or equal.

Conduit "U" bolts shall be hot-dip galvanized steel with 304 stainless steel hex-head bolts.

Equipment stands for supporting devices such as control stations, device boxes and the like, shall consist of a welded steel pipe and plate steel floor plate as detailed on the drawings. Equipment stands shall be hot-dipped galvanized after fabrication. Furnish O'Brien products or equal.

27. Conduit Miscellaneous Material

Double bushings for insulating wiring through sheet metal panels shall consist of mating

male and female threaded phenolic bushings. Phenolic insulation shall be high-impact thermosetting plastic rated 150 degrees C. Furnish OZ Type "ABB", or equal.

Conduit pull-cords for use in empty raceways shall be glass-fiber reinforced tape with foot-marked identification along its length. Furnish Thomas, Greenlee, or equal products.

Conduit thread coating compound shall be conductive, non-galling, and corrosion-inhibiting. Furnish Crouse-Hinds Type "STL", Appleton Type "ST", or equal.

Zinc spray for coating galvanized steel threads shall be Research Laboratory type "LPS", Mobil "Zinc-Spray" or equal conductive zinc-rich spray enamel product.

Foam sealant for waterproofing uses shall be Chase Technologies "Chase Foam", or equal.

28. Raceway Installation

Install the conduit system to provide the facility with the utmost degree of reliability and maintenance free operation. The conduit system shall have the appearance of having been installed by competent workmen. Kinked conduit, conduit inadequately supported or carelessly installed, do not give such reliability and maintenance free operation and will not be accepted.

Except as otherwise shown on the drawings, or otherwise specified, all underground and

in-slab conduit raceways shall be of the following type:

1. Except as otherwise specified, all power and control underground conduit runs shall be made with schedule 40 PVC. Bends to grade shall be made with plastic coated rigid galvanized steel conduit.

2. All future instrumentation underground conduit runs shall be made with plastic coated rigid galvanized steel conduit.

Except as otherwise shown on the drawings, or otherwise specified, all above grade conduit and otherwise exposed raceways shall be of the following type:

1. Indoor exposed power and control conduit shall be rigid aluminum conduit. Instrumentation, signal, and communication conduit shall be rigid steel conduit.

2. Outdoor exposed power, control, and instrumentation, signal, and communication conduit shall be rigid steel conduit.

3. Conduit concealed in masonry shall be with plastic coated rigid steel.

Raceways shall be installed for all wiring runs, except as otherwise indicated.

Conduit sizes, where not indicated, shall be N.E.C. code-sized to accommodate the number and diameter of wires to be pulled into the conduit. Unless otherwise indicated, 3/4" trade-size shall be minimum size conduit.

Unless otherwise noted, conduit runs shall be installed exposed. Such runs shall be made parallel to the lines of the structure. Conduit shall be installed such that it does not create a tripping hazard or an obstruction for headroom.

All runs of rigid conduit shall be threaded, and all male threads shall be coated with non-galling thread compound prior to assembly.

Conduit runs made in concrete pours or surface-mounted runs that are attached to the structure, shall be equipped with an expansion fitting where they cross an expansion joint, or at every 100 feet.

Unless otherwise shown, conduit penetrations through floors located below enclosures, shall be made each with couplings set flush with the outside faces of the concrete pour. Each pair of couplings shall be joined with a threaded spool piece. Use coated aluminum or galvanized steel couplings.

Rigid metallic conduit runs shall have their couplings and connections made with screwed fittings and shall be made up wrench-tight. Check all threaded conduit joints prior to wire pull. Coat all male threads with Crouse-Hinds "STL" or equal, conductive lubricant prior to joining.

All conduit runs shall be watertight over their lengths of run, except where drain fittings are indicated. In which cases, install specified drain fittings.

Plastic jacketed flexible steel conduit shall be used to connect wiring to motors, limit switches, and other devices that may have to be removed for servicing. Unless otherwise indicated, maximum lengths of flex shall be four (4') feet.

Where plastic jacketed flex is installed, make up terminal ends with liquid-tight flex connectors. In wet locations, install sealing gaskets on each threaded male connector. Each flex connector shall be made-up tightly so that the minimum pull-out resistance is at least 150 lbs. Install external spirally-wrapped ground wire around each run of liquid-tight flex and bond each end to specified grounding-type fittings.

Empty conduits shall have pull-tapes installed. Identify each terminus as to location of other end and trade size of conduit. Use blank plastic waterproof write-on label and write information on each label with waterproof ink. Cap exposed ends of empty conduit with

plastic caps.

Conduit runs into boxes, cabinets and enclosures shall be set in a neat manner. Vertical runs shall be set plumb. Conduits set cocked or out of plumb will not be acceptable.

Conduit entrances into equipment shall be carefully planned. Cutting away of enclosure structure, torching out sill or braces, and removal of enclosure structural members, will not be acceptable.

Use approved hole cutting tools for entrances into sheet metal enclosure. Use of cutting torch or incorrect tools will not be acceptable. Holes shall be cleanly cut and they shall be free from burrs, jagged edges, and torn metal.

All raceways shall be swabbed clean after installation. There shall be no debris left inside. All interior surfaces shall be smooth and free from burrs and defects that would injure wire insulation.

29. Installation of Conduit Bodies and Boxes

Conduit bodies such as "LB", "T", "GUAT", etc., shall be installed in exposed runs of conduit wherever indicated and where required to overcome obstructions and to provide pulling access to wiring. Covers for such fittings shall be accessible and unobstructed by the adjacent construction. GUA series pulling bodies rather than LB fittings and the like, shall be used for splicing purposes as well as pulling access.

Covers for all conduit bodies shall be installed with gasketed cast metal type where located in damp or wet locations.

All conduit boxes installed whose inside volume is less than 100 cubic inches shall be cast metal type with gasketed cast metal cover, unless otherwise indicated.

All conduit boxes whose inside volume exceeds 100 cubic inches shall be sheet metal type except where gasketed cast metal type, stainless steel or fiberglass reinforced polyester are indicated.

30. Installation of Raceway Support

All raceway systems shall be adequately and safely supported. Loose, sloppy and inadequately supported raceways will not be acceptable. Supports shall be installed at intervals not greater than those set forth by the NEC, unless shorter intervals are otherwise indicated, or unless conditions require shorter intervals of supports.

Multiple runs of surface mounted conduit on concrete or masonry surfaces shall be supported off the surface by means of aluminum channels. Attach each slotted channel support to concrete surface by means of two (2) 1/4" diameter stainless steel bolts into drilled expansion shields.

Single runs of surface mounted conduit on concrete or masonry surfaces shall be supported with hot-dipped malleable iron conduit clamps and nest-back spacers.

Conduit runs that are installed along metallic structures shall be supported by means of hot-dipped galvanized beam clamps as specified herein.

31. Raceway Labeling

In addition to labeling requirements as specified throughout this and other Sections, install wiring and raceway labeling as follows:

1. Apply write-on identification to empty conduits to identify each conduit as to terminus of other end and also to identify trade size of conduit.

2. Where active conduits terminate into bottoms of panelboards, install label on each conduit and show number and size of wiring and function of circuitry and trade size of conduit.

32. Wire and Cable

This section shall include wire and cable, terminating devices, splice kits, labeling, and appurtenances.

Process catalog submittals for the following:

1. Power and control cable
2. Instrument cable
3. Conductor Connectors
4. Tape Products
5. Labels

All conductors shall be soft-drawn annealed copper, Class B stranding that meets ASTM B-8. Copper conductors shall be uncoated, except as otherwise specified.

Single conductor cable for power, control, and branch circuits shall have cross-linked polyethylene insulation, rated for 600 volts. Cable shall be NEC type XHHW. All such cable shall be rated for wet or dry use. Cable insulation shall be color coded with factory pigmented colors below size #6 AWG. Color coding shall be as specified under Part 3 of this section. Cable shall be as manufactured by Southwire or equal.

Grounding electrode conductors and associated upcomers and grounding conductors shall be tin-plated stranded copper.

33. Connector Products

Insulated spring wire connectors, "wire-nuts", for small building wire taps and splices shall be plated spring steel with thermoplastic jacket. Connector shall be rated at 150 degrees C continuous. Furnish 3M "Hyflex", T&B "PT", Ideal or equal.

Mechanical connectors for 600V class wiring shall be tin-plated copper alloy bolted pressure type with bronze tin-plated hardware. Furnish connectors as follows:

Single conductor to flat plate - Blackburn LH

Multi-conductor to flat plate - Blackburn L2H, L3H, L4H

Split bolt connector - Blackburn HPS

Splice Connector - Blackburn S

Flush ground connector OZ Type "VG"

Connectors for control conductor connections to screw terminals shall be crimp-type with vinyl insulated barrel and tin-plated copper ring-tongue style connector. Furnish T&B "Sta-Kon", 3M "Scotchlok", or equal.

Terminal strips for miscellaneous field terminations of control and instrumentation circuits shall consist of 12 point box lug terminals with marking surface. Terminal assembly shall accept #18 to #12 AWG and shall be rated 600 volts. Furnish Allen- Bradley #1492-HJ812 terminal blocks.

34. Insulating Products

Tape products shall be furnished as hereinafter specified and shall be Plymouth,

Okonite, 3M, or equal.

General purpose electrical tape shall be 7 mil thick stretchable vinyl plastic, pressure adhesive type, "Slipknot Grey", 3M Scotch 33+, or equal.

Insulating void-filling tape and high voltage bedding tape shall be stretchable ethylene propylene rubber with high-tack and fast fusing surfaces. Tape shall be rated for 90 degrees C continuous, 130 degrees C overload, and shall be moisture-proof. Void filling tape shall be "Plysafe", 3M Scotch 23, or equal.

High temperature protective tape shall be rated 180 degrees C continuous indoor/outdoor, stretchable, self-bonding silicone rubber. High temperature tape shall be Plysil #3455, 3M Scotch 70, or equal.

Insulation putty filler-tape shall be Plymouth #32074, 3M Scotchfill, or equal.

Arc and fireproofing tape shall be Plymouth #3318, 3M Scotch #70 or equal.

35. Wire and Cable Labeling Products

Colored banding tape shall be 5 mil stretchable vinyl with permanent solid color. Colors shall be as hereinafter specified. Tape shall be Plymouth "Slipknot 45", 3M Scotch #35, or equal.

Numbered wire marking labels shall be PVC sleeve-type markers, T&B, Brady or equal.

Cable identification ties shall be weather resistant polyester with blank write-on space, T&B, Brady or equal.

36. Miscellaneous Wire and Cable Products

Cable grips shall be grip-type wire mesh with machined metal support. Furnish Kellems,

Appleton, or equal products.

Wire pulling compound shall be non-injurious to insulation and to conduit and shall be lubricating, non-crumbling, and non- combustible. Furnish Gedney "Wire-Quick", Ideal "Yellow" or equal.

37. Power and Control Cable Installation

Power and control conductors shall be sized as shown and where no size is indicated, the conductor size shall be #12 AWG for power circuits, #14 AWG for 120 volt control circuits and #16 AWG for 24 volt dc control circuits.

Equipment grounding conductors shall be installed with type XHHW or THHN insulated stranded copper conductors and the insulation color shall be green in sizes up to and including #10 AWG.

Color coding shall be as follows. Non-factory color coded cables shall be marked with specified color tape. Use the following colors:

120/240 Volt Systems	
L1	Black
L2	Red
Neutral	White
Ground	Green

Feeders shall be installed without splices. Branch circuits may be spliced for receptacle, lighting and small appliance load inside appropriate junction boxes.

Except as otherwise specified, taps and splices with #10 AWG and smaller, shall be made with insulated spring wire connectors. Such connectors in damp or wet locations shall be waterproofed by filling interstices around wires with silicone rubber and further insulating with

an envelope of stretched piece of EPR tape around each wire. Then, apply one-half lapped layer of electrical tape over all.

Taps, splices, and connections in #8 AWG and larger wires shall be made with copper alloy bolted pressure connectors. Each such connector shall be insulated by means of applying insulation putty over sharp edges so as to present a smooth bonding surface. Next, apply at least four (4) layers, half-lapped each layer of EPR tape. Then, make final wrapping of at least three (3) layers, half-lapped each layer of electrical tape.

Control wiring connections to stud type and screw type terminals shall be made with ring-tongue type crimp connectors. Label each terminal jacket with wire marking label at each connection.

Each wire connection shall be made up tightly so that resistance of connection is as low as equivalent length of associated conductor resistance.

Numbered marking labels shall be installed to identify circuit numbers from panelboards. Install labels on each wire in each panelboard, junction, pullbox and device connection.

Label each wiring run with write-on waterproof labels inside motor control center. Install write-on label ties around wire group at conduit entrance and write-on label the wire size, conduit size and service.

Install PVC sleeve type numbered marking on each control wire termination at each terminal strip and at each device. Do this in motor control center, terminal cabinets, safety switches, remote controllers, pilot operators, and instrumentation equipment. Number selected shall correspond to number on terminal strip.

All wiring inside equipment enclosures shall be neatly trained and laced with nylon

tie-wraps.

38. Ground Wiring Installation

Each item of equipment shall be adequately and thoroughly grounded. Comply with Article 250 of N.E.C., except where higher standards of grounding have been specified. In addition to requirements as specified under Section E10, install grounding for general wiring systems as follows.

Equipment grounding conductors (EGC) shall be installed in each run of power and control conduits. These wires shall be green colored in sizes #6 AWG and smaller and green banded in larger sizes. Ground wires shall be type THHN or XHHW insulated copper wires.

EGC runs into equipment shall be grounded to equipment bus where available, or to equipment ground lugs.

Where grounding type bushings are installed, bond EGC to bushing lug and ground each bushing lug to equipment ground bus ground lug, or ground rod.

39. Wiring Labeling

In addition to labeling requirements as specified throughout this Section, install wiring and raceway labeling as follows:

1. Apply numbered wire marking labels to control wiring terminations for each termination in each item of equipment. Use PVC sleeve type labels.

2. Apply numbered wire marking labels to power and control wiring terminations in motor control centers, panelboards, and at outlets to identify circuit numbers. Use PVC sleeve type labels.

3. Apply numbered wire marking labels to each signal wire termination in each instrument junction box, and in each item of equipment served by instrumentation circuits. Use PVC sleeve type labels.

4. Apply write-on identification labels to wiring sets in each motor control center, and in each pullbox and junction box. Show wire size, conduit size, and line and load information. Use waterproof plastic write-on labels with nylon tie-wraps.

40. Wire and Cable Testing

Each run of 600V class power and control wiring shall be tested prior to connection of line and load. Make tests with 1000V dc hand-crank or motor driven ohmmeter. Each run of wiring shall be tested phase-to-phase and/or phase-to-neutral, and phase-to-ground. Test results for each test shall be equal to or greater than 25,000,000 ohms with 1000V dc applied. All tests shall be made in the presence of the Owner's Project Representative or Engineer.

Test all runs of signal wiring with 250V dc megger. Insulation values shall meet or exceed 1,000,000 ohms per 100 feet (cable to shield).

Should any cable or circuit fail to meet the above tests, replace wire and retest.

41. Wiring Devices

All wiring devices shall be specification grade and shall meet NEMA WD 1-1971 requirements. Color shall be brown, unless otherwise indicated.

Cover plates for wiring devices shall be Crouse-Hinds WLRS for receptacles and DS185 for switches. Boxes shall be cast metal, raised-lid type with mounting ears. Furnish Crouse-Hinds "FD" or equal boxes.

Weatherproof/GFCI receptacle shall each consist of the following:

1. 2-gang FDB cast metal box with raised lids and integrally cast mounting ears.

2. Arrow-Hart 20A/120V corrosion resistant duplex receptacle #5362CR-GRY.

3. Arrow-Hart #GF2091M1 with 4501FS weatherproof flip lid cover.

Furnish the following miscellaneous wiring devices:

1. Single-pole, single-throw, 20A toggle switch shall be Arrow-Hart #1221, or equal.

2. Single-pole, double-throw (three-way) 20A toggle switch shall be Arrow-Hart #1223, or equal.

3. Double-pole, double-throw (four-way) 20A toggle switch shall be Arrow-Hart #1224, or equal.

4. Double-pole, single-throw 20A toggle switch shall be Arrow-Hart #1222, or equal.

42. Panelboards

Furnish 240Y/120V single phase lighting type panelboards where indicated on the drawings. Panelboards shall have NEMA 12 enclosures. Furnish each panel with complement of 22,000 amps interrupting capacity breakers as shown on the drawings. Panelboards shall be Cutler-Hammer Pow-R-Line 1 or equal. Furnish and install lock for each panel. Locks shall be keyed alike.

Main distribution panelboard shall be as specified above except that the interrupting rating shall be 65,000 amps at 240 volts. Distribution panelboard shall be Cutler-Hammer "Pow-R-Line 3A" or equal.

43. Main Switch

Main switch shall be heavy duty fused switch with 600 amp class R fuses. Enclosure shall be NEMA 12. Main fused switch shall be UL listed for service entrance. Furnish Cutler-Hammer #DH366NDK or equal.

44. Lighting

Furnish and install all lighting including obstruction lighting as scheduled on the drawings and specified herein. Incandescent lamps for Type C fixtures shall be long life type with a 20,000 hour life rating. All HID ballasts shall be constant wattage, high power factor type.

Furnish obstruction lights as scheduled. Furnish 120 volt obstruction light photoelectric controller and tower lighting relay. Photoelectric controller shall be Crouse-Hinds type PEC, catalog #52010, tower lighting relay shall be Crouse-Hinds type TLR, catalog #70020.

Process catalog submittals for each fixture type. Note fixture type on submittal.

Exterior lights and logo lighting shall be aimed at night.

45. Payment.

No separate payment shall be made for work under this Section, but all such work shall be considered incidental to the project and the payments made under specific Pay Items shall be considered as full compensation for these requirements.

SECTION 2.4
TRENCH EXCAVATION AND BACKFILL FOR INSTALLATION OF UNDERGROUND PIPE

2.4.1 SCOPE:

The work covered under this section is trenching and backfilling for the installation of underground pipelines, other conduits and their appurtenances. Installation procedures are covered in other sections of these specifications.

2.4.2 TRENCH EXCAVATION:

a. Classification of Materials: No classification of excavated materials will be made. Trenching work shall include the removal and subsequent handling of all materials excavated or otherwise removed in performance of the Contract work, regardless of the type, character, composition or condition thereof.

b. Rock Probings and Soil Borings: When included in the Contract Documents, rock probings and soil borings are intended merely to direct the attention of the Contractor to possible presence of rock to be encountered during trenching work. It shall be the Contractor's responsibility to verify its presence or absence and its physical characteristics. The Owner and the Engineer do not, in any manner, warrant that rock will or will not be encountered in trenches at any location.

c. Pumping, Bailing and Draining: The Contractor shall immediately remove all surface or ground water from trench excavation which may accumulate during the excavation and construction work, by providing the necessary underdrains, wellpoints or otherwise, and by doing the necessary pumping, bailing or draining. The Contractor shall have available at all times sufficient dewatering equipment in proper working order for doing the work herein required. All water removed from the excavation shall be disposed of in an approved manner, so as not to create unsanitary conditions, nor to cause injury to persons or property, or damage to the site or to the work in progress, nor to interfere unduly with the use of streets, private driveways, or entrances. Pumping, bailing and draining, dewatering, etc., shall be considered as incidental work and will not be paid for as separate items, but their cost shall be included in such Contract prices as are provided in the Contract, unless otherwise provided for in the Proposal.

d. Procedures: Trenches shall be at the widths shown in the details for the various pipe or conduit sizes and wall materials. If not shown, the widths shall only be as wide as necessary to permit proper installation and shall in no case be wider than the following for the various sizes of conduits:

33 inches and smaller outside dimensions - O.D. + 16 inches.
36 inches and larger outside dimension - O.D. + 24 inches.

The width of the trench from 12 inches above the top of the pipe to 6 inches below its bottom shall be no greater than described above. The width of the trench above that level may be as wide as desired for sheeting and bracing and the proper performance of the work at the option of the Contractor; however, payment will only be made to the widths shown on the details unless otherwise permitted by the Engineer. Sheeting, shoring and bracing shall be furnished and installed in the trench as may be necessary for the protection of the work and for the safety of personnel, and in no case less than that prescribed by local, state and federal regulations, and shall be as described in Trench Safety System Section of these specifications.

If for any reason, the width of the trench from 12 inches above the top of the pipe to 6 inches below the bottom of the pipe exceeds the width permitted, either pipe of adequate strength, special pipe embedment, or concrete arch encasement, as required by loading conditions and as determined by the Engineer, shall be furnished and installed by and at the expense of the Contractor.

The trench walls shall be cut as nearly vertical as practicable. The bottom of the trenches shall be accurately graded to accommodate the embedment and encasement called for, if any, at the pipe elevations and slope shown or indicated.

Care shall be taken not to excavate below the depths indicated. Unauthorized excavation shall be backfilled with granular embedment as directed by the Engineer and at the expense of the Contractor. Whenever wet or otherwise unsuitable soil is encountered in the bottom of the trench which, in the opinion of the engineer, is incapable of properly supporting the pipe, such soil shall be removed to the depth required and the trench backfilled to the proper grade with granular embedment. The Contractor shall receive compensation for such authorized extra depth at the unit price when set forth in the Proposal; otherwise, it shall be classified as Extra Work.

Mechanical equipment used for trench excavation shall be of a type, design and construction, and shall be so operated, that the trench bottom elevation can be controlled, that uniform trench widths and vertical sidewalls are obtained at least from an elevation of one foot above the top of the installed pipe to the bottom of the trench, and that trench alignment will be centered in the trench with adequate clearance between the pipe and sidewalls of the trench. Undercutting the trench sidewall to obtain clearance will not be permitted.

Rock, boulders, large stones, buried trees or stumps shall be removed at least 12 inches below and on each side of all parts of the pipe, manholes, or other structures. Excavation below subgrade in rock or boulders shall be refilled to subgrade with approved material and thoroughly compacted. This will be paid for as Extra Work.

Unless specific permission is given by the Engineer, the length of trench excavation, approximately to grade, shall not exceed 100 feet from the end of the pipe being installed. No excavation or pavement removal shall extend more than 300 feet in advance of the pipe being installed.

Adequate barricades, construction signs, torches, red lanterns, and guards as required shall be placed and maintained during the progress of the construction work to protect personnel and vehicles in on-site work or until it is safe for traffic when in travel ways. Whenever required, watchmen and/or flagmen shall be provided to prevent accidents and no extra compensation will be allowed therefore. Rules, regulations, laws and ordinances or local, state and federal authorities with respect to safety precautions shall be strictly adhered to. Where traffic is to be interfered with in any way, it shall be the Contractor's responsibility to notify the local police and fire departments.

Trenching operations shall be conducted so as to cause as little interruption to traffic as is feasible. Where vehicular or pedestrian traffic must cross open trenches, the Contractor shall provide suitable bridges at streets, driveways and walks. Where it is necessary to cross streets, at least half of the roadway shall be left open for traffic at all times. Fire hydrants, valve pit covers, valve boxes, meter boxes, fire or police call boxes or other utility controls shall be left unobstructed and accessible during the construction period.

Excavated materials which are suitable for bedding, embedment or backfill shall be piled adjacent to the work. Excavated materials which are unsuitable or in excess of that required shall become the property of the Contractor and shall be disposed of by him. Excavated materials shall be handled at all times in such manner as to cause a minimum inconvenience

to public travel and to permit safe and convenient access to private and public property adjacent to or along the line of the work. In parkways and easements where it is necessary to deposit excavated materials on lawns during the work, burlap or similar materials shall be placed on the lawn to prevent contact between the excavated materials and the lawn. Repair or restoration of lawns or landscaping damaged by such deposit shall be done by the Contractor at no cost to the Owner.

2.4.3 PROTECTION AND RESTORATION OF EXISTING UTILITIES:

An attempt has been made to show all underground pipe lines, conduits, and other obstructions along the proposed route of the conduit; however, this does not relieve the Contractor of the responsibility of locating these obstructions for himself nor does it relieve him of the responsibility of locating any obstruction not shown on the Drawings. Any damage done to any pipe line, conduit, or underground utility shall be reported at once to the Owner of the utility and will, at the discretion of the Owner, be immediately repaired by or at the expense of the Contractor, under the direction or supervision of the Owner of the damaged structure or pipeline.

Whenever existing utility structures or branch connections leading to main sewers, drains, conduits, pipe, or structures present obstructions to the grade and/or alignment of the pipe, they shall be permanently supported, relocated or reconstructed by the Contractor working under the supervision and direction of the Owner of the utility or obstruction involved.

2.4.4 TRENCH BACKFILL:

Backfilling shall not begin until all requirements of the pipe installation have been complied with and the Engineer has given his approval.

After placement and compaction of the embedment, the trenches shall be carefully backfilled using select, job excavated material free from debris, organic material, and stones. The backfill material shall be deposited in 6-inch layers, (measured before compaction) and carefully and thoroughly compacted to 90% maximum density per ASTM D-698 using approved mechanical tamps, until the pipe has a cover of not less than 12 inches or l/8 the depth of cut above the top of the pipe, whichever is greater. Care shall be taken in the placement and compaction of the backfill material to not disturb the line or grade of the installed pipe. The remainder of the backfill material shall then be placed in the trench in 1-foot layers (maximum) and tamped to a density at least equal to that of the surrounding earth.

Settling the backfill by jetting or flooding will only be permitted under certain circumstances when so shown on the Drawings or when approved by the Engineer in writing. Any trenches improperly backfilled, or where settlement occurs, shall be reopened to depth required and then refilled and compacted, with the surface restored to the required grade.

Open trenches across roadways or other paved areas shall be backfilled as specified above, except that the entire depth of trench shall be backfilled in 6-inch layers, and each layer shall be moistened and compacted to 95% maximum density per ASTM D-698. Surfaces lying outside the line of the work where disturbed as a result of the work under this Contract, shall be restored to their original condition by and at the expense of the Contractor.

2.4.5 BEDDING, EMBEDMENT AND BACKFILL MATERIALS:

Bedding, embedment and backfill materials shall meet the requirements described below unless otherwise instructed by the Engineer.

a. Gravel: Gravel for embedment shall consist of hard, durable, siliceous particles containing not more than 1 per cent by weight of organic and other deleterious materials, and shall meet the following gradation requirements:

Retained on 1 1/4 inch sieve	0 - 5%
Retained on No. 4 sieve	95 - 100%

b. Crushed Stone: Crushed rock for embedment shall be of two gradations: standard and fine; and each shall be composed of sound and durable particles of crushed limestone.

Crushed rock for embedment shall contain not more than 1 per cent by weight of organic matter (other than native bitumen), clays, loam or pebbles coated therewith and shall contain not more than 5 per cent by weight of any one of or combination of slate, shale, schist or soft particles of sandstone.

When tested by standard laboratory methods, crushed rock embedment for each gradation shall meet the following requirements for percentage by weight:

Standard Crushed Rock

Retained on 1 1/4 inch sieve	0 - 10%
Retained on 3/4 inch sieve	20 - 45%
Retained on 3/8 inch sieve	75 - 90%
Retained on No. 4 sieve	95 - 100%

Fine Crushed Rock

Retained on 3/8 inch sieve	0%
Retained on 1/4 inch sieve	0 - 5%
Retained on No. 4 sieve	15 - 45%
Retained on No. 10 sieve	95 - 100%

The percent of wear for each gradation shall not exceed 35 percent when tested with the applicable methods of ASTM C 131.

c. Granular Material: Granular material for embedment or backfill shall be a free-flowing material, such as sand, mixed sand and gravel, or sandy loam. Granular material shall be free from lumps, stones over 2 inches in greatest diameter, clay and organic matter. When wet, the material shall not form mud or muck.

The material shall be of such gradation that it can easily be compacted by flooding or jetting.

d. Select Material: Select material for backfill is defined as gravel, fine rock cuttings, sand, sandy loam or loam free of excessive clay. It may be utilized from the trench excavation, if otherwise suitable. Fine rock cuttings with no dimension greater than 2 in. (5.1 cm) in any direction are acceptable. When wet, the material shall not form mud or muck.

2.4.6 REMOVAL AND REPLACEMENT OF PAVEMENT:

When utility lines are to be installed under existing roadway, alley, parking, driveway or walking surfaces, those surfaces shall be removed and replaced to match existing pavement conditions, unless otherwise specified on the Drawings. Curb and gutter shall be tunneled under for installation of new utility lines.

SECTION 2.12
TRENCH SAFETY SYSTEM

2.12.1 GENERAL:

This item governs for furnishing and installing a trench safety system which meets or exceeds appropriate requirements of all local, state and/or federal laws, rules and/or regulations applicable to safety systems for excavation below ground surface. For any trench excavation and/or structural excavation in material other than unfractured solid rock and greater than five (5) feet in depth, provide a trench safety system for excavation below ground.

2.12.2 QUALITY ASSURANCE:

The trench safety system must meet appropriate requirements established in Occupational Safety and Health Administration (OSHA) Safety & Health Regulations, 29 CFR, Part 1926, Subpart P - Excavations, Trenching and Shoring.

2.12.3 CONTRACTOR TRENCH SAFETY PLAN:

Contractor must maintain at the construction site, a detail design prepared by a Registered Professional Engineer having a current license to practice engineering in the State of Texas. Contractor's Registered Professional Engineer must certify that his design and details are in conformance with appropriate OSHA standards and applicable specifications as required. Contractor's Registered Professional Engineer must affix his seal, sign and date the design, details and any other supporting documents for a trench safety system. Include with details the trench safety system plan that demonstrates the type(s) and location of system(s) to be used on this project.

Responsibility for preparation, documentation, implementation, and maintenance of the Trench Safety Plan is solely the responsibility of the Contractor. The Owner, Engineer and Resident Project Representative in the performance of their duties on the construction project assume no responsibility or liability, whether real or implied, for the existence, adequacy or performance of the Trench Safety Plan.

2.12.4 MATERIALS:

a. Timber: Trench sheeting materials to be minimum of 2 inches in thickness, solid and sound, free from weakening defects such as loose knots and splits. Minimum size of timber members per "Trench Shoring" table shown in Federal Guidelines.

b. Steel Sheet Piling: Steel sheet piling conforming to one of the following specifications:

1. ASTM A328
2. ASTM A572, Grade 50
3. ASTM A690

Steel for stringers and cross braces shall conform to ASTM A588.

c. Trench Boxes: Construct portable trench box of steel conforming to ASTM Specification A36. Use connecting bolts conforming to ASTM Specification A307. Welds to conform to requirements of AWS Specification D1.1.

2.12.5 INSTALLATION:

Construct, install, and maintain trench safety system in accordance with plans prepared by the Contractor's Registered Professional Engineer in order to prevent death or injury to personnel or damage to structures in or near trench excavation. Store materials excavated from trench no closer to edge of trench than one-half depth of trench.

2.12.6 SUPERVISION:

Contractor shall provide competent supervisory personnel at each trench while work is in progress to ensure Contractor's methods, procedures, equipment, and materials pertaining to safety systems in this item are sufficient to meet requirements of OSHA Standards.

2.12.7 MAINTENANCE OF SAFETY SYSTEM:

Maintain safety system as specified by the Contractor's Registered Professional Engineer. Take all necessary precautions to ensure safety systems are not damaged during their use. If at any time during its use, a safety system is damaged, personnel must be immediately removed from trench or excavation area and safety system repaired. Take all necessary precautions to ensure no loads, except those included in safety system design, are imposed upon excavation.

2.12.8 INSPECTION:

Make daily inspection of trench safety system to ensure that system meets OSHA requirements. Daily inspection shall be made by Contractor's competent personnel. If evidence of possible cave-ins or slides is apparent, cease all work in trench until necessary precautions have been taken to safeguard personnel entering trench. Contractor to maintain permanent record of daily inspections.

2.12.9 REMOVAL:

Bed and backfill pipe to a point at least one (1) foot above top of pipe prior to removal of any portion of trench safety system. Bedding and backfill to be in accordance with other applicable specification items. Backfilling and removal of trench supports to progress together from bottom of trench upward. Remove no braces or trench supports until all personnel have evacuated trench. Backfill trench to within five (5) feet of natural ground prior to removal of entire trench safety system.

2.12.10 MEASUREMENT:

Measure "Trench Safety System" by linear foot of trench protected. Measure "Permanent Timber Trench Shoring" of type required and installed by linear foot of trench.

2.12.11 PAYMENT:

Pay for "Trench Safety System" measured as stated on Bid Form. Pay for "Permanent Timber Trench Shoring" of type required and installed measured as stated on Bid Form.

GENERAL SITE FILLING & GRADING

GENERAL

The work covered by this section of the specifications consists of furnishing all labor, equipment, supplies, and materials and of performing all operations in connection with the stripping of the area and conservation of topsoil; excavations, including borrow; excavation for ditches; construction of embankments, shoulders, and gutter; preparation of subgrade; grading, including all hauling, wetting, rolling and other operations pertaining thereto for applicable projects, complete, in strict accordance with this section of the specifications and all other applicable Contract Documents.

All obstructions located within the areas to be graded, including natural obstructions, old foundations, concrete floors, and boulders, shall be completely removed from the site unless specifically provided to be left in place. Broken concrete or rock may be stockpiled, for use such as riprap on drainage ditches.

1. STRIPPING OF GROUND SURFACE

All vegetation, such as root, brush, heavy sods, heavy growth of grass, and all decayed vegetable matter, rubbish and other unsuitable material within the designated project area, shall be stripped or otherwise removed to ground level, before the grading or other earthwork is started. In no case will objectionable material be allowed to remain in or under the area to be graded. No topsoil shall be removed from the grading area without the specific approval of the Owner's Project Representative, but shall be stockpiled for spreading on the site.

2. GENERAL EXCAVATION

After all stripping has been done, excavation of every description and of whatever substances encountered within the grading limits of the project shall be performed to accommodate the lines and grades of the project as shown on the drawings, or as otherwise directed. When material encountered within the limits of the work is unsuitable for topsoil or other project fill, such material shall be excavated below the grade shown on the drawings or as directed by the Owner's Project Representative and replaced with suitable material. All excavated materials which are unsuitable for reuse shall be known as "waste", and shall be disposed of by the Contractor in accordance with "Items Recovered, Salvaged and Surplused From Project" of the Information For Bidders. During construction, excavation and filling shall be performed in a manner and sequence that will provide drainage at all times. Material required for fills in excess of that produced by normal grading operations shall be excavated from the borrow areas indicated on the drawings, if applicable.

3. BORROW EXCAVATION

Borrow material shall be selected to meet the requirements and conditions of the particular fill for which it is to be used. Borrow material shall be obtained from the designated borrow areas indicated on the drawings or otherwise approved unless from sources provided by

the Contractor. The necessary clearing and grubbing of borrow pits, burning and disposal of debris there from, and satisfactory drainage of borrow pits shall be performed by the Contractor at no additional cost. Except as otherwise permitted, borrow pits, like other excavated areas, shall be excavated in such a manner as will afford adequate drainage. The topsoil shall be removed and stockpiled and other spoil material shall be disposed of or may be used for special purposes, as directed. All borrow pits shall be neatly trimmed and graded to lines and grades shown on the drawings after the excavation is completed.

4. EXCAVATION OF DITCHES AND GUTTERS

Ditches and gutters shall be cut accurately to the cross sections and grades indicated on the drawings. All roots, stumps, a foreign matter in the sides and bottom of ditches shall be cut to conform to the slope, grade, and shape of the section shown. Care shall be taken not to excavate ditches and gutters below the grades indicated. Any excessive ditch and gutter excavation shall be backfilled to grade, either with suitable thoroughly compacted material, or with suitable stone or cobble to form an adequate gutter paving as directed. The Contractor shall maintain all ditches and gutters excavated under this specification free from detrimental quantities of leaves, sticks, and other debris until final acceptance of the work. All suitable material excavated from ditches and channel changes shall be used as fill or backfill in the completed work.

5. PREPARATION OF GROUND SURFACE FOR FILL

All vegetation, such as roots, brush, heavy sods, heavy growth of grass, and all decayed vegetable matter, rubbish, and other unsuitable material within the area upon which fill is to be placed, shall be stripped or otherwise removed before the fill is started. In no case will such objectionable material be allowed to remain in or under the fill area. Ground surfaces on which fill is to be placed, shall be plowed, stepped (benched), or broken up in such manner that the fill material will bond with the existing surface. Prepared surfaces shall be wetted and compacted when so directed.

6. FORMATION OF FILLS

Where the natural ground has been disturbed to foundation depth by previous excavation, where fills are required under foundation slabs, or where other controlled density fills and levees are required, the embankment material shall be compacted to 90% of maximum density at optimum moisture content, as determined by ASTM D 698 or AASHTO Method T99. Each layer of all controlled density fills and levees shall be compacted by rolling with an approved tamping roller or three-wheeled power roller or by other satisfactory means to 90% of maximum density at optimum moisture content, as determined by ASTM D 698 or by AASHTO Method T99.

The completed fill shall correspond to the finish contours or typical sections shown on the drawings or shall meet the requirements of the particular case. All suitable material removed from the excavation shall be used in forming the necessary fill. All fill material shall be reasonably free from roots or other organic material, trash, frozen material, and from all stones

having a maximum dimension greater than 6 inches. Earth or friable materials shall be placed in successive layers of loose material. Each layer shall be spread uniformly by the use of a blade grader or other approved device and rolled with an approved tamping or three-wheeled power roller until thoroughly compacted. Where rock is to be incorporated in fills or portion of fills composed largely of earth or friable materials, the rock shall be reduced to 6 inches maximum size. The upper layer containing rock shall be covered with a layer of earth or other approved material, not less than 6 inches in compacted depth, to provide a satisfactory subgrade or finish having no rock 4 inches or larger within 6 inches of the finished grade or subgrade.

As construction of the fill progresses, compaction tests may be made at the discretion of the Owner's Project Representative. If the compacted fill fails to meet the density specified, the compaction methods and moisture content shall be altered on subsequent work as necessary to obtain the maximum density. In no case will structures be approved which are constructed on foundations failing to meet the density tests as specified.

Controlled density fills shall be constructed in successive layers or the full width of the cross section and 5 ft beyond the foundations of all structures. Prior to compaction, the layers shall not exceed 4 inches in depth where pneumatic tire rolling it to be used and shall not exceed 6 inches in depth for rolling with other types of rollers. Layers of embankment may be formed by utilizing equipment which will spread the material as it is dumped or may be formed by being spread by blading or other acceptable methods. No additional material is to be placed on the fill until each successive layer is compacted to the density specified.

Each layer of fill shall be uniform as to material, density and moisture content before being compacted. Where layers of unlike material about each other, each layer shall be featheredged or the material shall be mixed as to prevent abrupt changes in the soil. No material placed in the embankment by dumping in a pile or window shall be incorporated in a layer in that position, but all such piles or windows shall be moved by blading or similar methods.

Water required for sprinkling to bring the material to the moisture content for maximum compaction shall be evenly applied and it shall be the responsibility of the contractor to secure a uniform moisture content throughout the layer by such methods as may be necessary. Moisture content shall be controlled to obtain the required density.

EARTHWORK FOR STRUCTURES

2.2.1 SCOPE:

The work covered under this section includes clearing, grubbing and stripping, excavation, backfill, embankment, grading and miscellaneous earthwork required for construction or installation of the various components of the project to the lines and grades shown on the Drawings or as otherwise specified.

2.2.2 CLEARING, GRUBBING AND STRIPPING:

It is the intent of this article to provide for the removal of all trees, brush, bushes, grass, decayed organic matter, stone, rock, rubbish or debris, and all other objectionable or unsuitable materials to a depth not less than twelve (12) inches below the bottom of proposed building slabs or other structures, below areas on which embankments are to be placed, and below finished grade as shown on the Drawings or as directed by the Engineer. All borrow areas shall also be cleared, grubbed and stripped before excavation operations begin to insure that such objectionable and unsuitable materials will not be present in proposed fills and embankments.

Top soil shall be stripped and stockpiled outside the area of operations for later use in and over areas which are to be replanted and/or landscaped as shown on the Drawings or directed by the Engineer. Excess topsoil materials shall be spread or wasted as approved by the Engineer.

All holes or pits remaining after the grubbing operations shall have the sides broken down or leveled if necessary to flatten out the slopes, refilled with acceptable material, moistened and properly compacted in layers to a density not less than that of the surrounding soil.

All organic waste materials from clearing and grubbing operations shall be burned if permitted by controlling authorities, buried on the construction site, or otherwise disposed of subject to the approval of the Engineer. Burning shall conform to applicable local and state laws or ordinances and the obtaining of any necessary permits shall be the responsibility of the Contractor. Should burning or burying not be possible or not be permitted by local or state ordinances, the Contractor shall dispose of all waste materials in an approved manner at no extra cost to the Owner.

2.2.3 EXCAVATION:

This work consists of the removal, displacement or shaping of earth, rock and all other surface and sub-surface materials to the extent necessary to permit proper installation or construction of the various components and facilities making up the Project as shown on the Drawings and/or described in the Contract Documents. The obtaining of borrow materials, from on or off-site locations, may also require that excavation procedures be followed.

Wherever the Owner has caused certain borings or explorations to be made on the site, or when any information pertaining to the character or depth of materials is found from observations, records or otherwise, such information revealed thereby is indicated in the Contract Documents. The action of the Owner in revealing such information shall not, in any manner, be construed as a warranty on the part of the Owner of the exact nature of the subsurface conditions that will be encountered during construction of the work. Although the information is shown as accurately as possible, the Owner does not guarantee that any materials to be encountered at any point or points are even approximately the same, either in character or elevations, as those shown. The information thus furnished by the Owner is intended only as a guide to the Contractor in making his own investigations prior to submitting a bid for the work.

All excavation under this contract will be unclassified unless otherwise noted. Separate compensation will not be paid for excavation, the costs being included in the particular bid items to which they most nearly relate.

a. Shaping and Trimming: Excavations shall be of such dimensions as to permit the proper construction of the work in the manner, shape, and size shown on the Drawings. Wherever the nature of the soil is such as to permit the making of a proper subgrade, the bottom of the excavation shall have the shape and dimensions shown on the plans. In such case machine excavation shall be so controlled as to not cut below grade and final trimming shall be by hand labor. The subgrade so made shall be free from all loose material before concrete is placed.

b. Subgrade and Additional Excavation: It is the intent of these specifications that the subgrade for all structures be excavated or prepared so as to provide a firm and unyielding foundation, brought to true line and grade, upon which the work may be constructed.

When called for on the Drawings, the use of crushed stone, gravel, granular fill or other specified material to build a base upon which to lay floor slabs, wall footings, etc., is required. Such base material shall be spread in a uniform layer of such thickness that when thoroughly compacted, trimmed and rolled it will form a base of the thickness and compaction specified on the Drawings.

In case the materials encountered at subgrade elevation are not stable or are otherwise deemed unsatisfactory by the Engineer, the excavation shall be carried to such additional depth as the Engineer may direct in writing. The Contractor shall refill such excavated space to subgrade level with crushed stone gravel or selected material as the Engineer may direct.

Stone, gravel, or selected material ordered for refilling such additional excavation will be paid for at the unit price set forth in the Proposal, the cost breakdown submitted for lump sum work, or as described for Extra Work described elsewhere in these Specifications. This price shall include the cost of any and all excavation incidental to its use.

c. Unauthorized Excavation: Wherever, through neglect of the Contractor, the excavation is carried beyond or below the lines and grades shown on the Drawings or given by the Engineer, except as specified above, all such excavated space shall be refilled with such material and in such a manner as may be directed by the Engineer so as to insure the integrity and stability of the affected structure. Beneath all structures, space excavated without authority shall be refilled by the Contractor, at his own expense as directed by the Engineer.

d. Disposal of Material: Surplus excavated material, in excess of that required for backfilling and site grading as shown on the Drawings, shall be disposed of as directed by the Engineer and shall be graded and left in a sitely condition acceptable to the Engineer in such a manner as not to impede the flow of surface water.

e. Shoring and Sheeting: As may be necessary for the safety of workmen and to prevent shifting of material with possible damage to completed or uncompleted structures and attendant delay of the work, excavations shall be properly shored, sheeted and braced as the nature of the ground may require or prudence dictate. All local, state and federal ordinances and laws shall be strictly adhered to. Bracing shall be so arranged as not to place any stress or load on portions of completed work until the general construction has proceeded far enough to provide ample strength.

In general, the sheeting and bracing shall be removed as the excavation is backfilled, and in such a manner as to avoid the caving in of the bank or disturbance of adjacent areas of structures. The voids left by the withdrawal of sheeting shall be filled in a manner approved by the Engineer.

Permission of the Engineer shall be obtained before the removal of any sheeting, shoring or bracing is undertaken.

Such permission by the Engineer shall not relieve the Contractor from the responsibility for injury to any structure or to other property or persons resulting from failure to leave such sheeting, shoring or bracing in place.

f. Removal of Water: The Contractor shall, during the excavation period and as long thereafter as the proper prosecution of the work may require, provide and maintain, in good operating condition, pumping equipment fully adequate in capacity to promptly remove all water entering any excavation or other parts of the work from surface runoff or groundwater sources.

All excavations shall be kept dry and the water pumped or drained from the work shall be disposed of in such a manner as to prevent damage to adjacent property or to other work under construction. Any and all damage, of whatever nature, caused by dewatering the work shall be promptly repaired or remedied by the Contractor at his own expense. This shall include the cleaning and flushing of existing drainage pipe lines where such are utilized.

2.2.4 BACKFILLING:

Excavations shall be backfilled to the elevations shown on the Drawings, to original ground level, or to such other grades as the Engineer may direct. The time elapsing before backfilling is begun shall be subject to the Engineer's approval. All backfilling shall be carried along in an orderly and expeditious manner.

Before backfilling around structures, all lumber, rubbish, braces and refuse shall be removed from the excavation and disposed of in a manner satisfactory to the Engineer.

Material used for backfill shall, unless otherwise specified, be good sound earth free from waste, rubbish, objectionable organic matter, large rocks, waste concrete or other unstable or unsuitable material.

It is essential that the backfill around structures be so placed, compacted and built up in such a manner as to avoid imposing undue and unbalanced loads on the structure, and to avoid future settlement. To this end care shall be exercised in selecting backfill material free from large hard clay lumps, especially in cramped areas directly adjoining the walls of structures.

The backfill around structures shall be brought up in horizontal layers of uniform thickness. Each such layer shall not be more than 12 inches in depth when measured loose. As may be necessary to attain maximum compaction, the backfill material shall be moistened by sprinkling lightly with water. After placing, each layer of backfill shall be thoroughly and uniformly compacted by means of mechanical tampers or small impact type tamping rollers. The compacting equipment and the manner of its use shall be subject to the approval of the Engineer.

Unless otherwise shown on the Drawings, densities of compacted backfill shall be not less than the following, when tested in accordance with ASTM D 698:

Adjacent to new structures - 90%
Under new structures - 95%.

Jetting or flooding will be an acceptable method for compaction of backfill only when specific permission is given in writing by the Engineer.

2.2.5 EMBANKMENT:

Embankment for the construction of levees, dikes, or for raising the elevation of existing ground to permit the construction of other proposed facilities to the lines and grades shown on the Drawings shall be made from acceptable materials excavated for the construction of other facilities on the site, if available in sufficient quantities. If these quantities are not adequate, additional amounts shall be obtained from specified borrow areas on the site or approved off-site locations.

Areas on which embankments are to be placed shall be cleared, grubbed and stripped as described previously in this section. Those areas shall then be plowed or scarified to provide a positive bond or "key" between the existing ground and the embankment materials.

Embankment material shall be free of organic and other objectionable matter as described for "Backfill" previously and shall have a Plasticity Index (P.I.) not less than 6 nor more than 15. It shall be spread in lifts not exceeding 12 inches in loose thickness and compacted to densities, as determined by ASTM D 698, not less than the following, unless otherwise shown:

Non-load bearing open areas - 85%
Dikes and levees - 90%
Adjacent to new structures - 90%
Under new structures - 95%

When compaction is completed, embankments and fills shall be shaped by approved methods and equipment to sections and elevations shown on the Drawings.

2.2.6 BORROW:

It is intended that materials excavated for new construction be used for making necessary fills, backfills and/or embankments. If the quantities generated are not sufficient, or that material does not meet the prescribed requirements, other satisfactory materials must be obtained from borrow sources on or off the site, transported to the location and used.

If a borrow source is not defined on the Drawings, it will be the Contractor's responsibility to locate such a source and arrange with the landowner(s) to obtain the required amounts of borrow material. For all off-site borrow the Contractor shall provide, at his expense, a soils analysis of the borrow. Permission shall be obtained in writing and the site will be subject to approval by the Engineer.

In general, procedures shall follow those described for clearing and grubbing, and for excavation. Provisions for drainage by gravity shall be made wherever practicable and the borrow pit shall be kept as dry as is feasible by pumping until borrow operations are complete.

The borrow site shall be graded, dressed and trimmed to present a neat, sitely condition when borrow operations are completed.

2.2.7 GRADING:

Site grading shall be performed to raise, lower or shape the existing ground to the lines, grades and sections shown on the Drawings or as may be directed by the Engineer to balance quantities or to enhance drainage. It shall be scheduled so that when completed any further operations performed by the Contractor will not disturb the finished grades.

Where shown on the Drawings or as directed by the Engineer, topsoil from the stockpile shall be spread in 6-inch layers over areas which are to be planted.

2.2.8 MEASUREMENT AND PAYMENT:

Unless separate and specific pay items are listed in the Proposal, separate payment will not be made for the work described in this section of the Specifications, the costs therefore being included in the particular contract pay items to which they most nearly relate. Payment for these related items will provide complete compensation for all labor, tools, materials and equipment; sheeting and shoring; dewatering and all incidentals, complete.

When listed as separate contract pay items, they will be measured and paid for at the unit or lump sum process named in the Proposal. Payment of the unit or lump sum prices will provide complete compensation for all labor, tools, equipment and materials necessary to perform the work shown on the Drawings and described in the Contract Documents.

SECTION 2.6
PRESSURE PIPING

2.6.1 SCOPE: This section governs materials, installing procedures and appurtenances for underground piping through which the flow of potable water, non-potable water and/or wastewater takes place under pressure. Trenching and backfill for the installation of underground pipes is covered in another section of the Specifications.

2.6.2 GENERAL:

a. The Contractor shall furnish and install piping and appurtenances of various sizes, materials and joint types as shown on the Drawings. Substitution will not be permitted unless specific permission is given, in writing, by the Engineer. Installation methods and procedures shall conform to the requirements in these Specifications, State of Texas Regulations and/or to pertinent ASTM, ANSI, NSF and AWWA Specifications.

b. All pipe, valves and appurtenances provided shall be new and unused.

c. All pressure piping shall be tested for leakage using a pressure test. Pressure piping for potable water service shall additionally be tested for contaminants after installation. The requirements and methods for performing such tests are detailed elsewhere in these Specifications. All pipelines shall meet the test requirements as a condition of final acceptance of the work. All costs incidental to making such tests shall be borne by the Contractor.

d. Lead Ban: The use of pipes and pipe fittings that contain more than 8.0% lead or solders and flux that contains more than 0.2% lead is prohibited in the following circumstances:

   1. For installation or repair of any public water supply; and

   2. For installation or repair of any plumbing in a residential or nonresidential facility providing water for human consumption and connected to a public drinking water supply system.

   3. This requirement will be waived for lead joints that are necessary for repairs to cast iron pipe.

e. All materials used for potable water service shall be approved by the National Sanitation Foundation (NSF) and shall be certified as compliant with NSF Standard 61 for use in the transportation of potable water and shall bear the NSF seal of approval (NSF-pw).

2.6.3 PIPE MATERIALS AND JOINTING SYSTEMS: It is the intent of these Specifications that the various material types provided by the Contractor be equal in requirements for strength and durability as the materials shown on the Drawings or in the Bid Proposal. Any questions concerning the various materials should be directed toward the Engineer a minimum of 48 hours PRIOR TO THE BID OPENING.

a. Polyvinyl Chloride (PVC) Pipe and Fittings:

   1. PVC pipe with ductile-iron pipe equivalent outside diameters, utilizing integral bells with elastomeric gasket joints, when specified, shall conform to one of the following specifications:

      i. PVC pipe, 1-2 inches to 12 inches in diameter, shall conform to the requirements of ASTM D-2241 and shall be SDR-26, Class 160 or heavier. SDR-26, Class 160 or heavier pipe may only be used for potable water lines greater than 3 inches in diameter when specifically shown on the plans, bid proposal, or when approved in writing by the Engineer.

      ii. PVC pipe, 4 inches to 12 inches in diameter, shall conform to the requirements of AWWA C900, Class 150 or heavier.

iii. PVC pipe 14 inches to 48 inches in diameter shall conform to the requirements of AWWA C905, Class 150 or heavier.

2. PVC solvent weld pipe, when specified, shall generally be used for pipe 2 inches in diameter, or smaller, (unless specifically authorized by the Engineer in writing prior to bidding or installation) and shall conform to one of the following specifications:

   i. PVC pipe, 2 inch to 12 inches in diameter, shall conform to the requirements of ASTM D-1785 and shall be SCH40 with a pressure rating of 150 psi or greater.

   ii. PVC pipe, 2 inch to 12 inches in diameter, shall conform to the requirements of ASTM D-1785 and shall be SCH80 with a pressure rating of 150 psi or greater.

   iii. PVC pipe, 1-2 inches to 12 inches in diameter, shall conform to the requirements of ASTM D-2241 and shall be SDR-26, Class 160 or heavier.

   iv. Solvents shall conform to ASTM D-2564.

3. Groove and Coupling based Restrained Joint PVC pipe and fittings, when specified, shall be Certa-LokJ C900/RJ or C905/RJ as manufactured by CertainTeed Corporation, with a pressure rating of 150 psi or greater, or approved equal.

4. PVC Fittings

   i. PVC Solvent weld fittings for PVC Pipe, when specified, shall generally be used for pipe 2 inches in diameter, or smaller (unless specifically authorized by the Engineer in writing prior to bidding or installation) and shall conform to one of the following specifications:

      (a) PVC solvent weld fittings, 2 inch to 12 inches in diameter shall conform to the requirements of ASTM D-2466 and/or ASTM F-1498 and shall be SCH40 with a pressure rating of 150 psi or greater.

      (b) PVC solvent weld fittings, 2 inch to 12 inches in diameter shall conform to the requirements of ASTM D-2466 and/or ASTM F-1498 and shall be SCH80 with a pressure rating of 150 psi or greater.

   ii. PVC Integral bell and gasket fittings, when specified, may only be used with low pressure sewage pumping applications for pipes smaller than 4 inches in diameter and shall conform to the requirements of ASTM D2241 and be Pressure Class 160 SDR 26.

5. All PVC pipe, solvents and fittings used for potable water service shall be approved by the National Sanitation Foundation (NSF) and shall be certified as compliant with NSF Standard 61 for use in the transportation of potable water and shall bear the NSF seal of approval (NSF-pw).

b. <u>Molecularly Oriented Polyvinyl Chloride (PVCO) Pipe:</u>

   1. PVCO pipe, 4 inches to 24 inches in diameter, when specified, shall have integral bells with elastomeric gasket joints, have ductile-iron equivalent outside diameters and conform to the requirements of AWWA C909, Class 150 or heavier.

2. All PVCO pipe used for potable water service shall be approved by the NSF and shall be certified as compliant with NSF Standard 61 for use in the transportation of potable water and shall bear the NSF seal of approval (NSF-pw).

c. Ductile Iron (DI) Pipe and Fittings:

1. Ductile Iron Pipe, when specified, shall conform to the requirement of AWWA C151, Pressure Class 150 or heavier and/or Thickness Class 50 or heavier.

2. Ductile Iron Joints and Fittings:

i. Flanged fittings shall be used above ground. Mechanical joints or restrained push-on joints shall be used when installed below ground.

ii. Threaded Flanges:

(a) Threaded flanges shall meet the requirements of AWWA C115, Pressure Class 250, or heavier, and shall be ductile iron.

(b) Bolt circles shall be compatible with ANSI/ASME B16.1, class 125 and/or ANSI/ASME B16.5, class 150.

(c) Rubber gaskets and bolt sets shall be provided with all flanged joints.

(d) Threaded flanges shall be wrapped, coated and lined per these specifications.

iii. Mechanical Joint and Flanged Fittings:

(a) Mechanical Joint and Flanged Fittings shall conform to the requirements of AWWA C110 or C153, Pressure Class 250 or heavier and shall be ductile iron.

(b) Rubber gaskets and accessories for mechanical joint and flanged fittings shall conform to the requirements of AWWA C111.

(c) Rubber gaskets, glands, bolts and other joint accessories, as required, shall be provided with all mechanical joint and flanged fittings.

(d) Mechanical joint and flanged fittings shall be wrapped, coated and lined per these specifications.

(e) Bolt circles for flanged fittings shall be compatible with ANSI/ASME B16.1, class 125 and/or ANSI/ASME B16.5, class 150.

iv. Push on Ductile Iron Joints and Fittings:

(a) Push on joints and fittings shall be used for un-restrained, straight runs of pipe, unless approved by the Engineer in writing.

(b) Push on joints shall conform to the requirements of AWWA C110 or C153, Pressure Class 250 or heavier and shall be ductile iron.

(c) Rubber gaskets and accessories for push on joints shall conform to the requirements of AWWA C111.

(d) Push on joints shall utilize integral bell sockets designed to receive pressure pipe O.D.=s as specified in AWWA C151 and AWWA C900.

(e) Push on joints shall be wrapped, coated and lined per these specifications.

3. All ductile iron pipe and fittings shall have exterior coatings, interior coatings and/or protective wraps as follows:

   i. Ductile iron pipe and fittings shall have an exterior bituminous coating and shall be cement-lined in conformance with AWWA C104, and/or a fusion bonded epoxy coating applied to the interior and the exterior in conformance with AWWA C116.

   ii. All buried ductile iron pipes and fittings shall be additionally protected by the use of polyethylene wrap as specified under Polyethylene Wrap for Metal Pipe and Fittings, below, in these specifications.

d. Restrained Joints and Restrained Fittings for PVC and DI Pipe

   i. Bell Restrainer for PVC C-900/C-905 & Ductile Iron Push-on Type Connections:

      (a) Pipe restraints shall be utilized to prevent movement for push-on D.I. or PVC (C900&C905) (compression type) bell and spigot pipe connections or where a flexible coupling has been used to join two sections of plain-end pipe D.I. or PVC (C900&C905). The restrainer may be adapted to connect a plain end D.I. or PVC pipe to a ductile iron mechanical joint (MJ) bell fitting. The restrainer must not be directionally sensitive.

      (b) The pipe shall be restrained by a split retainer band. The band shall be cast ductile iron, meeting or exceeding ASTM A536-80, Grade 65-45-12. The inside face or contact surface of the band shall be of sufficient width to incorporate cast or machined non-directionally sensitive serration to grip the outside circumference of the pipe. The serration shall provide full (360 degrees) contact and maintain pipe roundness and avoid any localized points of stress. The split band casting shall be designed to Abottom-out@ before clamping bolt forces (110ft-lb minimum torque) can over-stress the pipe, but will provide full non-directionally sensitive restraint at the rated pressures.

      (c) The restraint system may consist of two types: the two split retainer rings and for new construction use only the one split and one solid cast backup ring.

   ii. Compression Ring Fitting Restrainer for Ductile Iron Pipe & PVC C-900.

      (a) Compression ring with follower gland type of restrainer may be utilized in conjunction with Mechanical Joint (MJ) bell end ductile iron pipe fittings for restraining PVC C-900 and ductile iron pipe.

      (b) The system shall utilize a standard MJ gasket with a color-coded compression ring and replacement gland conforming to ASTM A 536-80, Grade 65-45-12.

      (c) Standard MJ fitting Tee-bolts and nuts shall be fabricated from high strength steel conforming to AWWA C111 and AWWA C153.

   iii. Fitting Restraint for Ductile Iron Pipe (Only):

      (a) Radial bolt type restrainer systems shall be limited to ductile iron pipe in conjunction with Mechanical Joint (MJ) bell end pipe of fittings. The system shall utilize a standard MJ gasket with a ductile iron replacement gland conforming to ASTM A 536-80. The gland dimensions shall conform to Standard MJ bolt circle criteria.

(b) Individual wedge restrainers shall be ductile iron heat treated to a minimum hardness of 370 BHN. The wedge screws shall be compressed to the outside wall of the pipe using a shoulder bolt and twist-off nuts to insure proper actuating of the restraining system.

(c) Standard MJ fitting Tee-bolts and nuts shall be high strength steel conforming to AWWA C111/A21.11-90 and C153/A21.53-88. 4. Standard MJ gasket shall be virgin SBR meeting ASTM D-2000 3 BA 715 or 3 BA 515. 4.

iv. Restraint products from the following manufacturers, or pre-approved equals, shall be provided:

(a) Slip on Joint Restraint Systems:

Manufacturer	PVC C900/C905	PVC SDR-26	Ductile Iron	D.I. 16@ Above
Ford/Uni-Flange	Uni-Flange 1350, 1390C	NONE	Uni-Flange 1390C	Uni-Flange 1390C
EBBA Iron Sales	MegaLug 1100HV,1500, 1600, 2800	MegaLug 6500	MegaLug 1100HD, 1700	MegaLug 1700
Star Pipe Products	1100, StarGrip 4100	1100	1100	1100
OR PRE-APPROVED EQUALS				

(b) Compression Ring Systems & Fitting Restraint:

Manufacturer	PVC C900/C905	PVC SDR-26	Ductile Iron
Ford/Uni-Flange	Uni-Flange 1500	NONE	Uni-Flange 1400
EBBA Iron Sales	MegaLug 2000PV, 2200	MegaLug 2000PV	MegaLug 1100, 1200
Star Pipe Products	RingLock 3500 StarGrip 4000	RingLock 3500 StarGrip 4000	StarGrip 3000
Tyler /Union	MJR Gland	NONE	MJR Gland
OR PRE-APPROVED EQUALS			

e. Copper Piping or Tubing:

1. Copper tubing, when specified, shall conform to ASTM B-88 and shall be Type L or Type K.

2. Tubing installed outside of buildings shall be Type K, only.

f. Steel Pipe and Fittings:

1. Steel pipe and fittings, when specified, shall conform to the pertinent requirements in AWWA C200, AWWA C203, AWWA C205, AWWA C206, AWWA C207, AWWA C208, AWWA C209, AWWA C210, AWWA C602, ASTM A 283, and ASTM A 139.

2. All buried steel pipes and fittings shall be protected by the use of polyethylene wrap as specified under Polyethylene Wrap for Metal Pipe and Fittings, below, in these specifications.

3. Nominal pipe diameter and wall thickness shall be as specified in the Drawings.

4. Pipe sections shall be furnished in not less than 40 foot lengths except for specials and closures sections as many are required.

5. Fabricated pipe and fittings shall be made of steel plate conforming to ASTM Specification A 283, Grade D, or A 139, Grade B.

6. All pipe shall be hydrostatically tested to one and one-half the working pressure as indicated on the plans. Fittings fabricated from hydrostatically tested pipe shall not require shop hydrostatic testing. Fittings made from non-hydrostatically tested pipe or fabricated from steel plate shall require hydrostatic testing or X-Ray inspection.

7. Steel pipe and fittings shall be joined with any of the end types as specified below, unless a particular end type is specified:

   i. Welded joints shall conform to, and be tested in accordance with, the AWWA Standard for Field Welding of Steel Water Pipe Joints, AWWA C206.

   ii. Mechanically coupled joints shall consist of Dresser Couplings, Style 38 or equal, or as specified on the Drawings.

   iii. Flanged joints shall conform to the AWWA Standard for Steel Pipe Flanges, AWWA Designation C207, Class D. The thickness of flanges shall be as specified in Table 2 of AWWA C207, or as specified on the Drawings.

8. Steel pipe and fittings shall be lined in accordance with any of the following specifications at the Contractor's option unless the particular requirements are shown on the Drawings.

   i. AWWA C203, AWWA C205, AWWA C210, AWWA C213, AWWA C216, AWWA C218, AWWA C222, AWWA C224, AWWA C225 or AWWA C602.

9. The exterior surface of steel pipe and fittings to be installed underground shall be coated in accordance with AWWA C203.

g. Polyethylene Pipe and Fittings:

1. Polyethylene pipe, 2 inch to 3 inches in diameter, when specified, shall conform to the requirements of AWWA C901.

2. Polyethylene pipe, 2 inch to 12 inches in diameter, shall conform to the requirements of ASTM D3035 and/or ASTM F714.

3. Pipe made from PE-2406 or PE-3406 material shall be pressure class 160 (DR9) or heavier.

4. Pipe made from PE-3408 material shall be pressure class 160 (DR11) or heavier.

5. Polyethylene fittings shall conform to the requirements of AWWA C906 and shall be of the same pressure class and PE material as the pipes they will join.

6. All polyethylene pipe used for potable water service shall be approved by the NSF and shall be certified as compliant with NSF Standard 61 for use in the transportation of potable water and shall bear the NSF seal of approval (NSF-pw).

h. Galvanized Steel Pipe and Fittings:

1. Galvanized steel pipe, 2" inch to 2 inches in diameter, when specified, shall be continuous weld and conform to ASTM A 53, Type F, Grade A. Galvanized steel pipe, 2 inches to 8 inches in diameter shall be electric-resistance welded and conform to ASTM A53, Type E, Grade B.

2. Galvanized steel pipe shall be SCH 40, or heavier, and have a minimum working pressure of 150 psi.

3. Galvanized steel pipe and fittings shall be hot-dipped galvanized and the average weight of the zinc coating shall not be less than 1.8 oz er sq. ft. of surface area (inside and outside).

4. Galvanized steel pipe and fittings utilizing threads shall conform to ANSI B1.20.1. and galvanized steel pipe and fitting utilizing merchant couplings shall comply with ASTM A 865.

5. Galvanized steel pipe and fittings shall be galvanized using NSF 61 approved materials and the supplied galvanized products shall be accompanied by an NSF 61 certification from the manufacturer.

i. Compliance: An affidavit of compliance covering all pipe and fittings shall be furnished stating that the materials furnished under these Specifications comply with the testing, marking, and all other requirements of the appropriate ANSI, ASTM, AWWA and NSF designations, as required.

2.6.4 POLYETHYLENE WRAP FOR METAL PIPE AND FITTINGS:

a. Polyethylene film wrap shall be used to protect all metal pipe and fittings in underground installations in accordance with AWWA C105.

1. Materials:

i. Linear Low Density Polyethylene film shall be manufactured from virgin materials conforming to ASTM D4976 with the following physical properties:

(a) Thickness - 0.008 in (8 mils) minimum
(b) Tensile Strength - 3,600 psi minimum (ASTM D882)
(c) Elongation - 800 % minimum (ASTM D882)
(d) Dielectric Strength - 800 volts per mil thickness minimum (ASTM D149)

ii. High Density Cross-Laminated Polyethylene Film shall be manufactured from virgin materials conforming to ASTM D4976 with the following physical properties:

(a) Thickness - 0.004 in (4 mils) minimum
(b) Tensile Strength - 6,300 psi minimum (ASTM D882)
(c) Elongation - 100 % minimum (ASTM D882)
(d) Dielectric Strength - 800 volts per mil thickness minimum (ASTM D149)

iii. The minimum width of the film tube or sheet, when lying flat, shall be as follows:

Nominal Pipe Size	Flat Tube Width	Flat Sheet Width
4"	14"	28"
6"	16"	32"
8"	20"	40"
10"	24"	48"
12"	27"	54"
14"	30"	60"
16"	34"	68"
18"	37"	74"
20"	41"	82"

2. Installation Procedures:

   i. The spigot end of the pipe should be elevated, dirt and debris brushed away, and 20 feet of film slipped over the pipe, if 18' joint being laid, if less, provided a 2' lap.

   ii. Wrap the film tightly around the spigot end, leaving about 4 to 5 inches clear, and secure the edge down lightly with the polyethylene adhesive tape or plastic tie-straps.

2.6.5 VALVES:

a. General:

1. Valves shall be of the size and type called for on the Drawings.

2. Unless otherwise noted, those which are two (2") inches and smaller shall be brass or bronze and shall have screwed ends, while those two and one-half (2-1/2") inches and larger shall be of the iron body, bronze mounted type with ends as required for the piping in which they are installed.

3. Valves shall open by moving or turning their operator mechanisms in a counter-clockwise direction, unless otherwise indicated.

4. All valves outside of structures in underground installations shall have valve boxes which shall be of cast iron, two piece heavy roadway type, and shall be designed to fit over a section of 6 inch PVC (C-900) pipe used as an extension from the top of the valve to approximately 12 inches below ground surface. The box shall have a flange type base, with the base approximately 4 inches larger than the outside diameter of the barrel of the box. The words "Water Valve" or ASewer Valve@ shall be plainly cast on the cover. Valve boxes shall additionally have a concrete pad cast around the valve box as shown on the Drawings.

5. All valves inside of structures shall be supported as indicated on the Drawings or as required for a proper and complete piping installation, including hangers, jacks and saddles, etc.

6. All valves used for potable water service shall be approved by the NSF and shall be certified as compliant with NSF Standard 61.

b. Gate Valves:

1. Gate valves shall meet the requirements of AWWA C509, *Resilient Seated Gate Valves* or AWWA C515, *Reduced-Wall, Resilient Seated Gate Valves*.

2. Gate valves shall be designed for a minimum working pressure of 150 psi.

3. Gate valves installed above ground shall have a rising stem, be the outside screw and yolk (OS&Y) type and shall be provided with a handwheel.

4. Gate valves installed below ground shall be the non-rising stem (NRS) type and shall be provided with a standard 2-in operating nut.

5. Any manufacturer of gate valves meeting AWWA 509 or AWWA C515 shall be acceptable, unless a specific manufacturer is called for on the drawings or in the bid proposal, because the owner has standardized their installations and spare parts inventory on that manufacturer.

c. Butterfly Valves:

1. Butterfly valves shall meet the requirements of AWWA C504, Class 150B, and shall be suitable for waterworks service.

2. Valve discs which are fabricated steel will not be permitted.

3. Butterfly valves installed below ground shall have an operator specifically designed for buried service which has a standard AWWA 2-inch square operating nut and above ground operator indicator.

4. Butterfly valves installed above ground, and smaller than 8 inches may have a lever operator with valve position notches, otherwise the valve shall have a hand wheel operator with an indicating post, which shows whether the valve is open or closed.

d. Metal Seated Gate Valves (Double Disc Type):

1. Metal seated gate valves (double disc type) valves are only to be used when specifically called for on the drawings, in the bid proposal or in writing from the Engineer. If a double disc type valve is not specifically called for, the valve should be a Resilient Seated gate valve.

2. Metal seated gate valves (double disc type) shall meet the requirements of AWWA C500.

3. Metal seated gate valves installed above ground shall have a rising stem, be the outside screw and yolk (OS&Y) type and shall be provided with a handwheel.

4. Metal seated gate valves installed below ground shall be the non-rising stem (NRS) type and shall be provided with a standard 2-in operating nut.

e. Plug Valves: Plug valves shall be installed where shown on the Drawings. They shall be of the non-lubricated type with resilient faced (neoprene) plugs. Bodies of the valves shall be of semi-steel. Within structures, valves which are 8 inches and smaller may have lever operators while those which re larger shall have handwheel operators.

f. Knife Gate Valves: Knife gate valves shall be installed where shown on the Drawings and be of the bonnet-less knife gate type with wafer face to face flanged connections. Flanges shall Be ANSI 125/150 pound standard. Valve packing shall be high temperature (212 min.) flax. Gate shall be 304 stainless steel finish ground on both sides. Stem shall be 316 stainless with double pitch threads on valves other than lever actuated. Yoke shall be bronze. Valve bodies shall have wetted parts of type 304 stainless steel.

g. Check Valves:

1. Horizontal Swing Check Valves (Distribution System - Above/Below Ground):

i. Horizontal swing check valves shall be installed where shown on the Drawings. Horizontal swing check valves shall not be used in connection with any high service booster pumps unless specifically authorized by the Engineer in writing.

ii. Horizontal swing check valves shall be constructed with an iron body, bronze mounted disc and have outside levers, springs/or weights.

iii. All horizontal swing check valves used for potable water service shall conform to AWWA C508 and comply with NSF Standard 61.

2. Non-Slam Double Door Check Valves (Pump Discharge):

   i. Non-Slam double door check valves shall be shall be compact wafer type designed to fit between standard ANSI flanges for use on high service booster pump discharges where space is limited and/or where shown on the drawings.

   ii. The check valve doors shall be spring loaded, normally closed, by means of one or more heavy duty stainless steel torsion springs. Flow from the pump shall cause the doors to open and upon pump shut down, the torsion spring will shut the doors before reverse flow starts and at a point of zero velocity, for non-slam closure. Seating shall be resilient and water tight.

   iii. Non-Slam double door check valves shall be APCO Series 9000, 9000E, 9000L or 9400 as manufactured by Valve and Primer Corporation, the Cla-Val Series 582 as manufactured by Cla-Val, the Gulf Wafer Model MB check valve, as manufactured by Tyco, or approved equal.

3. Silent Check Valves (Pump Discharge):

   i. Silent Check Valves shall be of the globe style for use on high service booster pump discharges and/or where shown on the drawings. Wafer style silent check valves shall only be used when specifically called for on the plans, bid proposal or in writing by the Engineer.

   ii. Silent check valves shall be designed with semi -steel bodies, bronze seat, bronze plug and stainless steel spring. The valve plug shall be center guided at both ends with a thru integral shaft and spring loaded for guaranteed silent shut off operation. The spring shall be helical or conical. The seat and plug shall be hand replaceable in the field for ease of maintenance. The flow area through the body shall be equal to or greater than the cross sectional area of the equivalent pipe size.

   iii. Globe style silent check valves shall be APCO Series 600 as manufactured by Valve and Primer Corporation, Cla-Val Series 581 as manufactured by Cla-Val, Williams-Hager check valve as manufactured by Clow or approved equal.

   iv. Wafer style silent check valves shall be APCO Series 300 as manufactured by Valve and Primer Corporation, Cal-Val Series 580 as manufactured by Cla-Val, Williams-Hager check valve as manufactured by Clow, or approved equal.

h. Backflow Prevention Valve Assemblies:

1. Backflow prevention assemblies shall be installed where shown on the plans or where it has been determined that an actual or potential cross-contamination hazard exists at a service connection. The type of assembly installed shall be dependent on the type of hazard, and shall meet the requirements of the Texas Administrative Code, Chapter 30 '290.47(i). Upon installation of the backflow prevention assembly, the assembly shall be tested and a report meeting the requirements of Texas Administrative Code, Chapter 30, '290.47(f) shall be filed with the public water supply.

2. Reduced Pressure Principle Backflow Preventer (RPBA): Reduced Pressure Backflow Preventers shall conform to the requirements of AWWA C511 and shall consist of two independently acting spring-loaded swing check valves, an automatically operating pressure differential relief valve, two tightly closing shut-off valves (located at each end of the device) and four test cocks. The check valves and pressure differential relief valve shall be repairable or replaceable without removing the device from the line. The opening of the relief valve to be accomplished by a convoluting diaphragm so as to be independent of the line pressure.

i. Tapping Sleeves and Tapping Valves: Tapping sleeves shall be ductile iron or stainless steel and shall conform to the specifically designed for the pipeline sizes materials to be tapped. All tapping sleeves, crosses and tapping valves required in the distribution system shall be rated for a minimum pressure of 150 psi and shall be poly wrapped, where ductile iron. Tapping valves shall meet the requirements established in 2.6.5(b), Gate Valves, of these specifications.

j. Air Release, Air/Vacuum and Combination Air Valves:

1. Air Release, Air/Vacuum and Combination Air Valves for water service shall conform to the requirements of AWWA C512 and shall be NSF 61 certified.

2. Air Release, Air/Vacuum and/or Combination Air Valves shall be of the type specified on the drawings and shall be located as shown on the drawings, or in locations as directed by the Engineer in writing.

3. Air Release, Air/Vacuum or Combination Air Valves installed below ground shall be in vaults as shown on the plans.

4. Valves for water service shall be Model Nos. 50, 55, 200, 200A, 140, 150, or 143C-151C as manufactured by Valve and Primer Corporation; or Series 34, 35, 36, 37, or 38 as manufactured by Cla-Val, or Series A, AL, C, or AL/PL as manufactured by Crispin Valve Company, or approved equal.

5. Valves for sewer service shall be complete with rubber hose and quick disconnect couplings for back flushing and shall be Model Nos. 400, 440 or 450 as manufactured by Valve and Primer Corporation; or Series 34WW, 35WW, or 36WW as manufactured by Cla-Val, or Series S, SL, S/SL, or US as manufactured by Crispin Valve Company, or approved equal.

k. Three-Way Valves: Three-way valves shall be lever-operated, tapered plug valves with resilient (neoprene) plug facings, designed to permit the plug to be unseated from the body prior to rotation and to be reseated after it has been turned to the desired location. The plugs shall be single style and self-locking in the seated position. Operating levers and indicators that can be seen at the lever shall be furnished for each valve. Operating extensions shall be furnished for each valve installed in a pipe trench. Valve bodies shall be semi-steel.

l. Valve Vaults:

1. Corrugated Metal Valve Vaults: All corrugated metal valve vaults shall be manufactured out of 16ga material with a 2oz zinc coating. Dimensions of each box will be as shown on the plans. The box shall have a securely fastened black steel lid with a handle, locking hasp and a full length hinge located one-third of a diameter measured from the outside towards the center. The box lid shall be primed and painted with two coats of epoxy and one coat of polyurethane (total dry film thickness not less than 16.0 mils). Corrugated metal valve boxes shall be manufactured by West Texas Culverts (817-888-3871), or approved equal.

2. Concrete Valve Vaults: All concrete valve vaults shall be pre-cast or cast in place using concrete as specified elsewhere in these specifications. Dimensions of each box will be as shown on the plans. The valve vault shall have a lid or hatch as shown on the plans.

m. Electric Valve Actuators:

1. Electric Valve Actuators for water service shall conform to the requirements of AWWA C540 and shall be suitable for use with the valves which are to be operated.

2. Actuator shall have a torque switch/sensor. The switch should be adjustable over the entire torque range of the unit and shall be designed for protection in both directions of travel.

3. Actuator shall have a gear limit switch which is in step wether the gear is operated manually or electrically. The switch should be adjustable over the entire range of travel.

4. A manual declutch lever shall be provided which will permit handwheel operation of the valve. When the motor is energized, the unit shall return to motor operation without imparting any motion to the handwheel.

5. At a minimum the electric controls and electric motor enclosures shall meet NEMA 4, water-tight construction requirements. If the electric motor enclosure and/or electric controls are to be in a below ground vault, the electric motor enclosure and/or electric controls shall meet NEMA 6, submersible requirements.

6. The electric valve actuator shall be provided by Limitorque, Dynatorque, AUMA Actuators, or approved equal.

2.6.6 SERVICE CONNECTIONS:

a. Service taps shall be made in the side of water mains at a 45° angle with the horizontal. Each connection shall be equipped with a service clamp, corporation stop, and curb stop, as indicated on the Drawings. No direct taps shall be permitted.

b. Service connections shall terminate at the meter loop for new service, or at a convenient tie-in point for existing or replacement services. The meter loop installation shall include the meter and may include other specified items such as pressure reducing valves and backflow preventers. The meter loop and associated appurtenances shall be installed in a meter box of the type shown on the plans and meeting one the following requirements:

1. Plastic Meter Boxes: Plastic meter boxes shall be molded out of high density polypropylene with a drop in plastic reader lid. Plastic meter boxes shall be installed where shown on the plans and shall be large enough to accommodate the specified meter and appurtenances.

2. Corrugated Metal Meter Boxes: All corrugated metal valve vaults shall be manufactured out of 16ga material with a 2oz zinc coating and have a cast iron frame and lid which reads AWater Meter@. Corrugated meter boxes shall be installed where shown on the plans and shall be large enough to accommodate the specified meter and appurtenances.

2.6.7 FIRE HYDRANTS:

a. Fire hydrants installed under this Contract shall be manufactured in strict compliance with the AWWA C502. In addition, other design features, as listed below, shall be incorporated in the manufacture of the fire hydrants furnished under these Specifications.

b. Fire hydrants shall be of the compression type which close with the pressure and shall be so designed as to provided for drain ports that are an integral part of the main valve assembly and work automatically when the hydrant is operated. The main valve shall remain closed without loss of water in the event of a traffic accident. Hydrants shall have a five and one-quarter inch (5-1/4") main valve. All hydrants shall have two, two and one-half inch (2-1/2") hose nozzles and one four and one-half inch (4-1/2") pumper nozzle with National Standard hose coupling screw threads. Nozzles shall have gaskets attached; operating nut shall be pentagon shape, one and one-half inch (1-1/2") point to flat at base of nut and one and seven sixteenths inch (1-7/16") at the top. All hydrants shall open counter-clockwise.

c. Fire hydrants shall be provided with a safety flange assembly, located at a point approximately two inches (2") above the ground line, and shall consist of two (2) piece stem and barrel and designed so as to assure no breakage or damage to either the stem or upper or lower barrel in the event of being accidentally struck by a vehicle.

d. Hydrants shall be designed so that all maintenance, including the installation of extension sections, may be performed above ground with no excavation necessary. Additionally, it shall be possible by means of a swivel flange to face the hydrant nozzles in any desired position.

e. Fire Hydrants with a 5-1/4 inch main valve shall not be connected to any distribution line smaller than 6-inches in diameter.

f. On any make or model of hydrant not presently in use in the water system, one (1) valve seat wrench and/or tools for removing movable parts from the hydrant barrel shall be furnished.

g. Hydrants shall be of the dry top design with all working parts and operating threads scaled away from the water in either the open or closed position: "O" ring seal packing shall be used to prevent water and oil leakage between the barrel and dry top of the hydrant. The stem shall be bronze lined where it passes through the "O" ring seals.

h. Provisions shall be made so that lubrication of all hydrant working parts will be permitted without the removal of the hydrant bonnet. It is desired that a lubrication system be provided whereby oil is stored in a reservoir, and all bearing surfaces and working parts are completely force lubricated by the normal operation of the fire hydrant.

2.6.8 POST AND FLUSHING HYDRANTS:

a. Post and Flushing hydrants are for line flushing or water filling stations and are to be used on distribution lines smaller than 6-inches, or where shown on the drawings.

b. Post and Flushing hydrants shall be provided with a safety flange assembly, located at a point approximately two inches (2") above the ground line, and shall consist of two (2) piece stem and barrel and designed so as to assure no breakage or damage to either the stem or upper or lower barrel in the event of being accidentally struck by a vehicle.

c. Post and Flushing hydrants shall be Mueller 2-1/8" Post Hydrants, Mueller Fabricated Post-Type Hydrant, M&H Styles 33, 133 or 233, Kupferle Eclipse No. 2, Kupferle Mainguard No. 77, or approved equal.

2.6.9 INSTALLATION AND CONSTRUCTION METHODS:

a. General:

1. Pipe and appurtenances shall be of new and unused material.

2. The full length of each section of pipe shall rest solidly upon the pipe bed, with recesses excavated to accommodate the bells and joints. Any pipe that has the grade or joint disturbed after laying shall be taken up and relaid. The interior of the pipe shall be thoroughly cleaned of all foreign matter before being lowered into the trench, and shall be kept clean during laying operations by means of plugs or other approved methods. The pipe shall not be laid in water, or when trench or weather conditions are unsuitable for the work. Water shall be kept out of the trench until the joints are completed. When work is not in progress, open ends of pipe and fittings shall be securely closed so that no trench water, earth or other substances will enter the pipes or fittings. Any section of pipe found to be defective before or after laying shall be replaced with new pipe without additional expense to the Owner.

3. Installation and jointing procedures used shall be in conformance with the appropriate ANSI, AWWA and/or ASTM Specifications and the manufacturers' recommendations.

b. Excavation, Trenching and Backfilling: Excavation, trenching and backfilling are covered in other sections of these Specifications.

c. Installation of Pipe and Fittings:

1. Handling: Pipe and accessories shall be handled in such manner as to insure delivery to the site in sound, undamaged condition. Particular care shall be taken not injure the pipe coating.

2. Cutting: Cutting of pipe shall be done in a neat and workmanlike manner without damage to the pipe. Unless otherwise authorized by the Engineer, cutting shall be done by means of approved type mechanical cutters.

3. Placing and Laying:

i. While suspended in the sling and before lowering into the trench, the pipe shall be inspected for defects and cast iron pipe shall be tapped with a light hammer to detect cracks. Defective, damaged or unsound pipe will be rejected and shall be removed from the site.

ii. Deflections from a straight line or grade, as required by vertical curves, horizontal curves or offsets, shall not exceed 6/D inches per linear foot of pipe, where D represents the nominal diameter of the pipe expressed in inches. The Contractor shall provide special bends or a sufficient number of shorter lengths of pipe to provide angular deflections within the limit set forth, as approved by the Engineer.

iii. After placing a length of pipe in the trench, the spigot shall be centered in the bell and pipe pushed into position and then brought into the required alignment. Except where necessary in making connections with other lines, or as authorized by the Engineer, pipe shall be laid with the bells (or sockets) facing in the direction of laying.

4. Thrust Restraint: Fittings at bends in the pipeline shall be firmly blocked against the undisturbed vertical face of the trench, with concrete blocking as detailed, to prevent the fittings from being blown off the lines when under pressure. If the character of the soil is such that in the opinion of the Engineer the fittings cannot be securely blocked, or if requested by the Contractor and approved by the Engineer, metal harness may be used. Such harness shall be tie rods or clamps of adequate strength to prevent movement. Steel rods or clamps shall be galvanized or otherwise rustproofed, or shall be painted with acid-proof paint as directed by the Engineer and shall be encased in polyethylene film. Concrete blocking shall be placed such that the pipe and fittings shall be accessible for repair.

5. Bored Crossings:

i. Piping which is to cross railroad or highway right-of-way shall be installed by boring and jacking when shown on the Drawings. The construction methods and special requirements for boring and jacking will be dictated by the permit requirements of the right-of-way-owner. In the case of the Texas Department of Transportation, boring and jacking will conform to requirements of Item 476 of the *Texas Department of Transportation Standard Specifications for Construction of Highways, Streets and Bridges, 2004.*

ii. If railroad and/or highway Specifications call for the pipe to be encased, the case shall be smooth steel pipe. Used steel casing in good condition may be used with the approval of the Engineer.

iii. The casing shall be installed by boring a hole not more than one inch larger than the outside diameter of the casing and jacking the casing into place. The carrier pipe shall then be made up and pushed through the casing pipe, being supported with casing insulators/spacers. The maximum distance between spacers should be six (6) feet for carrier pipes under 36 inches in diameter. For larger diameter carrier pipes use the

manufacturer=s recommendations. When in place there shall be no contact between the carrier and casing pipes.

iv. The casing shall be of the size and gage as shown on the Drawings. Grouting of the annular spaces shall be in accordance with the requirements of the right-of-way owner and as shown on the plans. All work shall be accomplished in accordance with the permit grantor=s requirements.

6. Insulation:

i. Insulation shall be applied to lines above ground or to lines with less than six (6) inches of cover. The insulation shall extend 6 inches below ground or until the piping enters an insulated enclosure.

ii. The insulation shall be 2-inch thick 500E Snap-On Heavy Density Pipe Insulation. Valves and fittings shall be insulated with preformed sections of 2-inch insulation.

iii. Finish: Completely cover insulation with vapor barrier mastic in a thick coat. Fill any void or chinks with cut pieces of fiberglass insulation and coat with vapor barrier mastic. Fill voids in shields with fiberglass insulation and cover open ends and entire saddle with vapor barrier mastic.

iv. Covering: A jacket of .016 aluminum shall be applied over the insulation. Provide a minimum 3 inch overlap and fasten snugly with .020 SS bands, at overlap and not less than 24 inch on centers. Install in neat and workmanlike manner with pleasing completed appearance acceptable to the Engineers.

v. Valves and Fittings: Fitting insulation shall be applied in the same manner as adjacent pipe insulation with sufficient bands to hold securely in place.

d. Setting Valves and Valve Boxes: Valves and valve boxes shall be installed in the lines as shown on the Drawings. Valves and valve boxes shall be set plumb, and centered, with valve boxes placed directly over the operating nuts. Backfill shall be carefully placed and compacted around the valve box and concrete pad constructed as detailed. Valves shall have the interiors cleaned of all foreign matter before installation. Stuffing boxes shall be tightened and the valve shall be inspected in opened and closed position to see that all parts are in working condition.

e. Installation of Fire Hydrants:

1. Each fire hydrant shall be set upon a stone or concrete slab (2000 psi) not less than four (4) inches thick and not less than 18" x 18" in horizontal dimensions. Where solid rock exists in the bottom of the trench and same is excavated to the proper depth to form a foundation for the hydrant, the slab of stone or concrete above specific may be omitted, when approved by the Engineer.
2. There shall be placed around the base on the hydrant not less than seven (7) cubic feet of crushed rock or clean gravel, or other approved material, to provide reservoir capacity so that the hydrant will completely drain when closed. The hydrant shall be set vertical and plumb with large steamer nozzle facing nearest curb, and to a depth such that the center of the steamer nozzle is not less than fifteen (15) inches, nor more than eighteen (18) inches above finished curb grade. In order to obtain proper grade for the fire hydrant, where the main line is below normal depth, 22-1/2 or 45 degree bends may be used in the fire hydrant. As an alternate, not more than one 18-inch barrel extension may be used in combination with or without bends as above. The hydrant shall be carefully and substantially blocked against the firm trench walls with 2000 psi concrete. Provisions must be made to protect the drain from being blocked.

3. Polyethylene film wrap shall be installed to finish grade elevation for corrosion protection.

2.6.10 PRESSURE AND LEAKAGE TESTING OF WATER LINES:

a. After the pipe is laid, the joints completed, and the trench backfilled, sufficiently to prevent flotation and/or buckling under pressure (with joints exposed), the newly laid piping or any valved section of piping shall be subjected to pressure and leakage testing as required by State Regulations and/or AWWA Standards.

b. Test Procedure:

1. Each section of line to be tested should be slowly filled with water while all of the air is expelled at the high points.

2. The test pressure should be applied by means of a metered pump connected to the pipe in a manner acceptable to the Engineer. The test pressure should be 150% of the design working pressure or 125 pounds per square inch, whichever is higher. The maximum pressure at the lowest point of the test section shall not be more than 150 pounds per square inch, or the maximum pressure rating of the materials.

3. The test pressure must be maintained by additional pumping, if necessary, for two (2) hours, during which the pressure is recorded at regular intervals and the amount of leakage is determined by measuring the amount of additional water pumped into the line.

4. Cracked or defective pipe, fittings, valves, or faulty blocking disclosed in the simultaneous pressure and leakage test shall be repaired and the test repeated until the test results are satisfactory to the Engineer.

c. Allowable leakage shall be determined as follows:

$$Q = \frac{LD\sqrt{P}}{148{,}000}$$

Q = Quantity of makeup water, in gallons per hour.
L = Length of pipeline being tested.
D = nominal diameter of the pipe in inches.
P = average test pressure during the leakage test in psi (gauge).

d. The Contractor shall furnish all necessary materials and equipment including tap to pressure line. The cost for testing shall be included in unit cost of pipe materials. All observed or otherwise known leaks shall be eliminated regardless of otherwise meeting the above test requirements.

2.6.11 PRESSURE AND LEAKAGE TESTING OF PRESSURE SEWER LINES:

a. Pressure and leakage tests for pressure sewer lines (force mains), shall be the same as described in *Pressure and Leakage Testing of Water Lines*, above.

2.6.12 STERILIZATION OF POTABLE WATER LINES:

a. Disinfection shall be conducted in accordance with AWWA Standard C651.

b. The Contractor shall furnish all labor, equipment, and materials necessary for the disinfection and testing of all potable water pipelines before they may be placed into service.

c. The lines shall be disinfected by the application of a chlorination agent which may be a liquid chlorine, a liquid chlorine gas-water mixture, or a calcium hypochlorite solution which shall be fed into the lines through a suitable solution-fed device, or other methods approved by the Engineer.

d. The chlorination agent shall be applied at or near the point from which the line is being filled, and through a corporation stop of other approved connection inserted in the horizontal axis of the newly laid pipe. The water used to fill the line shall be controlled to flow into the section to be disinfected very slowly, and the rate of application of the chlorination agent shall be in such proportion to the rate of water entering the pipe that the chlorine dose applied to the water entering the line shall be at least 50 parts per million. The treated water shall be retained in the pipelines for a period of not less than twenty-four (24) hours. At the end of the retention period, all treated water shall be thoroughly flushed from the lines until the replacement water in the line shall have a chlorine residual of not more than 0.2 parts per million.

e. To test the efficacy of the disinfection, one (1) water sample per every 1,000 feet of installed pipeline shall be collected by the contractor and submitted to a laboratory, approved by the Texas Department of Health, for bacteriological analysis. If a sample should fail the bacteriological testing, the Contractor shall repeatedly sterilize and test the line until such time that all samples meet the above requirements.

2.6.13 MEASUREMENT AND PAYMENT: Unless separate pay items for supplying and installing are listed in the Proposal, the price of pressure flow pipe and appurtenances shall be included in the lump sum or per linear foot prices therein to which they most nearly relate. Payment of these lump sum or per linear foot prices will include and provide complete compensation to furnish, install and test the pressure flow pipe and appurtenances as shown on the Drawings and described in the Contract Documents, complete in place.

(END OF SPECIFICATION)

CONCRETE FOR STRUCTURES

GENERAL

This item shall govern for the materials used; for the storing and handling of materials; and for the proportioning and mixing of concrete.

The concrete shall be composed of Portland cement, aggregates (fine and coarse), admixtures if desired or required, and water, proportioned and mixed as hereinafter provided.

1. Materials

When instructed to do so by the Owner's Project Representative, the Contractor shall furnish a laboratory report or a signed certification that the following requirements have been met.

(1) Cement. The cement shall be either Type I, II or III, Portland Cement conforming to ASTM C 150, modified as follows:

Unless otherwise specified, the specific surface area of Type I and II cements shall not exceed 2,000 square centimeters per gram (Wagner Tubidometer-Test Method Tex-310-D). For concrete piling, the above limit on specific surface area is waived for Type II cement only.

For cement strength requirements, either the tensile or compressive test may be used.

Either Type I or II cement shall be used unless Type II is specified on the plans. Except when Type II is specified on the plans Type III cement may be used when the anticipated air temperature for the succeeding 12 hours will not exceed 60°F. Type III cement may be used in all precast prestressed concrete except in piling when Type II cement is required for substructure concrete.

Different types of cement may be used in the same structure, but all cement used in any one monolithic placement shall be of the same type and brand. Only one authorized by the Owner's Project Representative.

Cement may be delivered in bulk where adequate bin storage is provided. All other cement shall be delivered in bags marked plainly with the name of the manufacturer and the type of cement. Similar information shall be provided in the bills of lading accompanying each shipment of packaged or bulk cement. Bags shall contain 94 lbs. net. All bags shall be in good condition at the time of delivery.

All cement shall be properly protected against dampness. No caked cement will be accepted. Cement remaining in storage for a prolonged period of time may be retested and rejected if it fails to conform to any of the requirements of these Specifications.

(2) Mixing Water. Water for use in concrete and for curing shall be free from oils, acids, organic matter or other deleterious substances and shall not contain more than 1,000 parts per million of chlorides as C1 nor more that 1,000 parts per million of sulfates as So_4.

Water from municipal supplies approved by the State Health Department will not require testing, but water from other sources will be sampled and tested before use in structural concrete. The Contractor shall furnish the test results from an independent laboratory, at his sole expense.

Tests shall be made in accordance, with the "Standard Method of test for Quality of Water to be used in Concrete" (AASHTON Method T 26), except where such method are in conflict with the provisions of this Specification.

(3) Coarse Aggregate. Coarse aggregate shall consist of durable particles of gravel, crushed blast furnace slag, crushed stone, or combinations thereof; free form frozen material or injurious amount of salt, alkali, vegetable matter, or other objectionable material either free or as an adherent coating; and its quality shall be reasonable uniform throughout. It shall not contain more than 0.25% by weight of clay lumps, or more than 1.0% by weight of shale, no more than 5% by weight of laminated and/or friable particles when tested in accordance with Test Method Tex-413-A. It shall have a wear of not more than 40% when tested in accordance with Test Method Tex-410-A.

Unless otherwise specified on the Plans, coarse aggregate will be subjected to five cycles of the soundness test in accordance with Test Method Tex-411-A. The loss shall not be greater than 12% when sodium sulfate is used, or 18% when magnesium sulfate is used.

Permissible sized of aggregate shall be governed by Table 1 and Table 4, except that when exposed aggregate surfaces are required, coarse aggregate gradation will be as specified is used.

When tested by approved methods, the coarse aggregate, including combinations of aggregates when used, shall conform to the grading requirements shown in Table 1.

		Percent Retained on Each Sieve							
Aggregate Grade No.	Nominal 2 ½ Size	2 in.	1 ½ in.	1 in.	¾ in.	½ in.	3/8 in.	No. 4	No. 8
1	2 1/2"	0	0-20	15-50		60-80		95-100	
2 (467)*	1 1/2"		0	0-5		30-65	70-90	95-100	
3	1"		0	0-5	10-40	40-75		95-100	
4 (57)*	1"		0	0-5		40-75		90-100	95-100
5 (67)*	3/4"			0	0-10		45-80	90-100	95-100
6 (7)*	1/2"				0	0-10	30-60	85-100	
7	3/8"					0	5-3	75-100	
8	No. 4					0	0-5	35-60	90-100

*Number in parenthesis indicate that these gradations conform to corresponding ASTM gradation from ASTM C 33.

TABLE 1

Coarse Aggregate Gradation Chart

The aggregate shall be washed. The loss by Decantation (Test Method Tex-406-A) plus the allowable weight of clay lumps, shall not exceed 1%, or the value shown on the Plans, whichever is smaller.

(4) Fine Aggregate. Fine aggregate shall consist of clean, hard, durable and uncoated particles of natural or manufactured sand or a combination thereof, with or without a mineral filler. It shall be free from frozen material or injurious amounts of salt, alkali, Vegetable matter or other objectionable material and it shall not contain more than 0.5% by weight of clay lumps. When subjected to the color test for organic impurities (Test Method Tex-408-A), it shall not show a color darker than standard.

The fine aggregate shall produce a mortar having a tensile strength equal to or greater than that of Ottawa sand mortar when tested in accordance with Test Method Tex-317-D.

Where manufactured sand is used in lieu of natural sand, the acid insoluble residue of the fine aggregate shall be not less than 28% by weight when tested in accordance with Test Method Tex-612-J.

When tested by approved methods, the fine aggregate or combinations of aggregates including mineral filler shall conform to the grading requirements shown in Table 2.

	Percent Retained on Each Sieve							
Aggregate Grade No.	3/8 in.	No. 4	No. 8	No. 16	No. 30	No. 50	No. 100	No. 200
1	0	0 to 5	0 to 20	15 to 50	35 to 75	65 to 90	90 to 100	97 to 100

NOTE 1: Where manufactured sand is used in lieu of natural sand, the percent retained on the No. 200 sieve shall be 94 to 100.

NOTE 2: Where sand equivalent value is greater than 85, the retain age on the No. 50 sieve may be 65 to 94 percent.

TABLE 2

Fine Aggregate Gradation Chart

Fine aggregate will be subjected to the Sand Equivalent Test (Test Method Tex-203-F). The sand equivalent shall not be less than 80 nor less the value shown on the Plans, whichever is greater.

For all classes of concrete, the fineness modulus as defined below for fine aggregates shall be between 2.30 and 3.10, for Grade 1 only.

The fineness modules will be determined by adding the percentages by weight retained on the following sieves, and dividing by 100; No's. 4, 8, 16, 30, 50 and 100.

(5) Mineral Filler. Mineral filler shall consist of stone dust, clean crushed sand, or other approved inert material.

(6) Mortar (Grout). Mortar for repair of concrete, shall consist of one part cement, two parts finely graded sand, and enough water to make the mixture plastic. When required to prevent color difference, white cement shall be added to produce the color required. When required by the Owner's Project representative, latex adhesive shall be added to the mortar.

(7) Admixtures. Calcium Chloride will not be permitted. Unless otherwise noted, Air-entraining, retarding and water-reducing admixtures may be used in all concrete and shall conform to the requirements of the Items, "Concrete Admixtures".

2. <u>Storage of Cement</u>

All cement shall be stored in well-ventilated weatherproof buildings or approved bins, which will protect it from dampness or absorption of moisture. Storage facilities shall be ample, and each shipment of packaged cement shall be kept separated to provide easy access for identification and inspection.

Small quantities of sacked cement may be stored in the open for a maximum of 48 hours on a raised platform and under waterproof covering.

3. Storage of Aggregate

The method of handling and storing concrete aggregate shall prevent contamination with foreign materials. If the aggregates are stored on the ground, the sites for the stockpiles shall be clear of all vegetation and level. The bottom layer of aggregates shall not be disturbed or used without recleaning.

When condition require the use of tow or more sizes of aggregates, they shall be separated to prevent intermixing. Where space is limited, stockpiles shall be separated by physical barriers.

Methods of handling aggregates during stockpiling and subsequent use shall be such the segregation will be minimized.

Unless otherwise authorized by the Owner's Resident Project Representative, all aggregate shall be stockpiled at least 24 hours to reduce the free moisture content.

4. Measurement of Materials

The measurement of the materials, except water, used in batches of concrete shall be by weight. The fine aggregate, coarse aggregate and mineral filler shall be weighed separately. Where bulk cement is used it shall be weighed separately but batch weighing of sacked cement will not be required. Where sacked cement is used, the quantities of material per batch shall be based upon using full bags of cement. Batches involving the use of fractional bags will not be permitted.

Allowances shall be made for the water content in the aggregates.

Bags of cement varying more than 3% from the specified weight of 94 lbs. may be rejected; and when the average weight per bag in any shipment, as determined by weighing 50 bags taken at random, is less than the net weight specified, the entire shipment may be rejected. If the shipment is accepted, the concrete mix shall be adjusted to a net weight per bag fixed by an average of all individual weights which are less than the average weight determined from the total number weighed.

5. Weighing and Measuring Equipment

(1) Cement Weighing and Batching Equipment. Where bulk cement is used, it shall be fully protected from contamination or damage during handling.

(a) Cement shall be batched by weight and scaled will be of the beam or springless dial type and shall be the product of a reputable manufacture. Scales not accurate to a tolerance of 4 lbs per 1,000 lbs net load in the

hopper shall not be used. The value of the minimum gradation on any type scale shall not be greater than 5 lbs.

(b) The scales shall be so constructed as to indicate to the operator that the required load in the hopper or container is being approached; similarly they shall also indicate when the hopper or container is empty. The indicator shall show at least the last 50 lbs of the load. After cement is weighed it shall be protected from damage or loss in handling or in transit.

(2) Aggregate Weighing Equipment. Aggregate weighing equipment shall conform to the following general requirements.

(a) The storage bins shall be of suitable size and shape to adequately meet the needs of the weighing and batching equipment. The framework and foundation shall be adequate to support the total imposed loads.

(b) The weighing hopper or container shall be of sufficient size and tight enough to hold the entire load without leakage, shall be supported entirely upon the scales, and be free of other supports. The hopper or container shall be so constructed as to permit easy and sufficient removal of any overload. The discharge gate shall have a substantial latch which will hold it tightly in place during introduction for the aggregate into the hopper. When more than one aggregate size is to be weighed in a single hopper there shall be a separate compartment for each size so arranged that each can be discharged separately and the overload of any compartment easily removed.

(c) Scales shall conform to the requirements as provided under paragraph (1), "Cement Weighing and Batching Equipment", hereinabove, and in addition thereto the indicator requirement (Par. b) shall be amended to show at least the last 200 lbs of the load.

(d) Aggregate weighing equipment shall be fully loaded for 5 hours before testing and using in order to allow settlement and adjustment under working conditions.

(3) Water Measuring Equipment. The measuring device for measuring water by volume shall indicate the quantity in gallons and fractions thereof. When a volumetric tank or bucket is used for measuring the water, the supply inlet shall cut off automatically and remain of off until the container has emptied completely and the discharge line to the mixer is closed. When water is measured by weight, the weight bucket shall be properly attached to scales meeting the general requirements of the Specification. When a pressure type flow meter of volumetric measurement of the water is used, it shall be constructed that any setting may be locked and the meter shall be capable of being manually or automatically reset to the locked setting after the addition of water to each batch.

Regardless of the method of water measurement used, the operating mechanism shall regulate the quantity of water required for any given batch to within plus or minus 1.0% of specified quantity of water required for concrete mixes. Provisions of permanent nature shall be made for checking the accuracy herein specified.

6. Concrete Mix Design and Control

The Contractor will be required at his expense to furnish continuous plant control of the concrete, by securing the services of an independent testing laboratory, sufficiently experienced and approved by the Engineer. Within a period of not less than 10 days prior to the start of concreting operations the Contractor shall submit to the Engineer a design of the concrete mix he proposes to use together with samples of all materials to be incorporated into the mix and a full description of the source of supply of each material component, at his expense. The design of the concrete mix shall produce a concrete complying with the requirements stated herein.

It shall also be the responsibility of the Contractor to determine and measure the batch quantity of each ingredient, including all water, so that the mix conforms to the Specifications and any other requirements shown on the Plans.

Trial batches will be made and tested using all the proposed ingredients prior to the placing of concrete, and when the aggregated and/or brand of cement or admixture is changed. Trial batches shall be made in the mixer to be used on the job. When Transit Mix concrete is to be used, the trial designs will be made in a transit mixer representative of the mixers to be used. Batch size shall not be less than 50% of the rated mixing capacity of the truck.

Mix designs from previous or concurrent jobs may be used without trail batches if it is shown that no substantial change in any of the proposed ingredients have been made.

The coarse aggregate factor shall not be more than 0.82 except that when the voids in the coarse aggregate exceed 48% of the total dry loose volume, the coarse aggregate factor shall not exceed 0.85. The coarse aggregate factor shall not be less than 0.68 unless authorized by the Engineer.

If the strength required for the class of concrete being produced is not secured with the cement specified in Table 4, the Contractor may use an approved water-reducing or retarding admixture, or he shall furnish aggregates with different characteristics, which will produce the required results. Additional cement may be required or permitted as a temporary measure until the redesign is checked.

Water reducing or retarding agents may be used with all classes of concrete at the option of the Contractor, and will be required for hot weather concreting and for continuous slab placement.

When retarding admixture is required for hot weather concreting, as specified in Item, "Concrete Structures", the amount to be used will be as required in the Item, "Concrete

Admixtures". When used in continuous slab placement, the amount to be used will be establishing by several trial batches with varying retarder content and simulating the placing conditions to be encountered. When water-reducing or retarding agents are used at the option of the Contractor, reduced dosage of the admixture will be permitted.

Entrained air will be required in accordance with Table 4. the concrete shall be designed to entrain 5% air when Grade 1 or 2 coarse aggregate is used, 6% when Grade 3 or 4 coarse aggregate is used and 7% when Grade 5, 6, or 7 is used. Concrete as placed in the structure shall contain the proper amount as required above with a tolerance of plus or minus 1 ½ percentage points. Occasional variations beyond this tolerance will not be cause for rejections. When the quantity of entrained air is found to be above 3 percentage points over those values given herein, additional test beams or cylinders will be made at the Contractor's expense. If these beams or cylinders pass the minimum flexural or compressive requirements, the concrete will not be rejected because of the variations in air content.

7. Consistency

In cases where the consistency requirements cannot be satisfied without exceeding the maximum allowable amount of water, the Contractor may use a water-reducing or retarding agent or the Contractor shall furnish additional aggregates, or aggregates with different characteristics, which will produce the required results. Additional cement may be required or permitted as a temporary measure until aggregates are changed and designs checked with the different aggregates or admixture. In general, the consistency of concrete mixtures shall be such that:

(1) The mortar will cling to the coarse aggregate.

(2) The aggregates will not segregate in the concrete when it is transported to the place of deposit.

(3) The concrete, when dropped directly from the discharge chute of the mixer, will flatten out at the center of the pile, but the edges of the pile will stand and not flow.

(4) The concrete and mortar will show no free water when removed from the mixer.

(5) The concrete will slide and not flow into place when transported in metal chutes at an angle of 30° with the horizontal.

(6) The surface of the finished concrete will be fee from a surface film of "laitance".

The consistency of the concrete as placed should allow the completion of all finishing operations without the addition of water to the surface. When field conditions are such that additional moisture is needed for the final concrete surface finishing operation, the required water shall be applied to the surface by fog spray only, and shall be held to a minimum. The concrete shall be workable, cohesive, possess satisfactory finishing qualities, and of the stiffest

consistency that can be placed and vibrated into a homogeneous mass. Excessive bleeding shall be avoided. Slump requirements will be as specified in Table 3.

Concrete Designation		Desired Slump	Maximum Slump
Structural Concrete			
(1)	Cased Drilled Shafts	5	6
(2)	Slurry Placed Shafts	6	7
(3)	Uncased Frilled Shafts, Thin-Walled Sections 9" or less	4	5
(4)	Slabs, Caps, Columns, Piers, Wall Sections Over 9", etc.	3	4
(5)	Prestressed Concrete Members		
	Class H	4	5
	Class H-H	6	8
(6)	Concrete Traffic Barrier		
	(Cast-in-place or Precast)	4	5
	(Slip-form)	11/2	As designated by the Engineer
Concrete Placed Underwater		6	7
Riprap, Curb Gutter and Other Miscellaneous Concrete		As specified by Owner's Project Representative	

NOTE: No concrete will be permitted with slump in excess of the maximums shown unless authorized by Owner's Project Representative after submittal of appropriate Mix Design by the Contractor.

TABLE 3

Slump Requirements

8. Quality of Concrete

The concrete shall be uniform and workable. The cement content, maximum allowable water cement ratio, the desired and maximum slump and the strength requirements of the various classes of concrete shall conform to the requirements of Table 3 and 4 as required herein.

The Contractor shall, at his own expense, have at least three test beams or cylinders prepared and tested by an approved commercial testing laboratory for each separate structure and for each 50 cu yds, or portions thereof, placed each day. The Contractor shall maintain proper curing facilities for test specimens and furnish all materials and make all arrangements for making and testing the test specimens. Three copies of the laboratory test reports shall be furnished to the Engineer.

Concrete failing to meet the compressive strength requirements for the class of concrete specified will be rejected and shall be removed and replaced without cost to the Owner.

The costs of all materials, preparation of test cylinders, furnishing and maintaining curing facilities and furnishing the required laboratory services shall be included in the Contract prices for the various methods of measurements and payment for concrete.

A test shall be defined s the average of the breaking strength of two cylinders or two beams as the case may be. Specimen will be tested in accordance with Test Methods Tex-418-A or Tex-420-A.

For small placemats on structures such as manholes, inlets, culverts, wingwalls, etc., the number of tests shall be a minimum of one for each 25 cu yds placed over a several day period.

All test specimens, beams or cylinders, representing tests for removal of forms and/or falsework shall be cured using the same methods, and under the same conditions as the concrete represented.

"Design Strength" beams and cylinders shall be cured in accordance with TDHPT Bulletin C-11 and Supplement thereto.

The Contractor shall provide and maintain curing facilities as described in Bulletin C-11 and Supplement thereto, for the purpose of curing test specimens. Provision shall be made to maintain the water in the curing tank at temperatures between 70° and 90° F.

When control of concrete quality is by 28 day compressive tests, job control will be by seven day compressive tests which are shown to provide the required 28 day strength, based on results from trial batches. If the required 7 day strength is not secured with the cement specified in Table 4, changed in the batch design will be made as specified in Paragraph 7.

Class Of' Concrete	Sx. Cement Per C.Y.	Min. Comp. Strength (f') 28 Day psi	Min. Beam Strength 7 Day psi	Max. Water Cement Ratio	Coarse Aggregate Number
A	5.0	3,000	#500	6.5	1-2-3-4
B	4.0	2,000	330	8.0	2-3-4-5-6-7
C	6.0	3,600	#600	6.0	1-2-3-4-5-8
D	3.0	1,500	250	11.0	2-3-4-5-6-7
E	6.0	3,000	500	6.0	2-3-4-5
F	6.0 to 8.0	As Specified on Plans	f'c / 6	5.5	2-3-4-5
H	6.0	As Specified on Plans	N.A	5.5	3-4-5-6
S	6.0	3,600	600	5.0	2-3-4-5

Entrained air will be required for bridge slabs, tops of direct traffic culverts, piers, bents, precast piling (non-Prestressed), drilled shafts placed in water, bridge railing and concrete barrier railing. When Class "H" concrete is used in barrier railing entrained air will not be required.

Grade 1 coarse aggregate will not be permitted in cased drilled shafts.

When Type II cement is used with Classes "C" or "S" concrete the 7 day beam break required will be 550 psi minimum and with Class "A", 460 psi minimum.

The use of Grade 7 aggregate must have prior approval of the Engineer.

Grade 8 aggregate for use in machine laid curb.

Table 4

Classes of Concrete

9. Mixing Conditions

The concrete shall be mixed in quantities required for immediate use. Any concrete which is not in place within the limits outlined below, shall not be used. Retempering of concrete will not be permitted.

The maximum time interval between the addition of cement to the batch, and the placing of concrete in the forms shall not exceed the following:

Air or Concrete Temperature (Whichever is Higher)	Maximum Time (Addition of Water or Cement to Placing in Forms)
Non-Agitated Concrete	
Over 80°F	15 Minutes
35°F to 79°F	30 Minutes
Agitated Concrete	
90°F or Above	45 Minutes
75°F to 89°F	60 Minutes
35°F to 74°F	90 Minutes

The use of an approved retarding agent in the concrete will permit the extension of each of the above temperature-time maximums by 30 minutes, for bridge decks, top slabs of direct traffic culverts and cased drilled shafts, and one hour for all other concrete except that the maximum time shall not exceed 30 minutes for non-agitated concrete.

In threatening weather, which may result in conditions that will adversely affect quality of the concrete to be placed, the work shall be postponed. Where work has been started and changed in weather conditions require protective measures, the Contractor shall furnish adequate shelter to protect the concrete against damage from rainfall, the Contractor shall also provide protective coverings for the material stock piles. Aggregate stock piles need be covered only to the extent necessary to control the moisture conditions in the aggregated to adequately control the consistency of the concrete.

10. Mixing and Mixing Equipment

All equipment, tools, and machinery used for hauling materials and performing any part of the work shall be maintained in such condition to insure completion of the work underway without excessive delays for repairs or replacements.

The mixing shall be done in a batch mixer of approved type and size that will produce uniform distribution of the material throughout the mass. Mixers may be either the revolving drum type or the revolving blade type, and shall be capable of producing concrete meeting the requirements of these Specifications.

The mixing equipment shall be capable of producing sufficient concrete to provide the quantities required to comply with Item, "Concrete Structures".

After all the ingredients are assembled in the drum, the mixing shall continue not less than 1 minute for mixers of 1 cu yd or less capacity plus 15 seconds for each additional cubic yard or portion thereof.

The mixer shall operate at the speed and capacity designated by the Mixer Manufactures Bureau of the Associated General Contractor of America. The mixer shall have a plate affixed showing the manufacturer's recommended operating data.

The absolute volume of the concrete batch shall not exceed the rated capacity of the mixer.

The entire contents of the drum shall be discharged before any materials are placed therein for the succeeding batch.

The first batch of concrete materials placed in the mixer for each placement shall contain an extra quantity of sand, cement, and water sufficient to coat the inside surface of the drum.

Upon the cessation of mixing for any considerable length of time, the mixer shall be thoroughly cleaned.

The concrete mixture shall be equipped with an automatic timing device which is put into operation when the skip is raised to its full heights and dumping. This device shall lock the discharging mechanism and prevent emptying of the mixer until all the materials have been mixed together for the minimum time required, and it shall ring a bell after the specified time of mixing has elapsed.

The water tank shall be arranged so that the amount of water can be measured accurately, and when the tank starts to discharge, the inlet supply shall cut off automatically.

Whenever a concrete mixer is not adequate or suitable for the work, it shall be removed from the site upon a written order from Owner's Project Representative and suitable mixer provided by the Contractor.

Pick-up and thro-over blades in the drum of the mixer which are worn down more than 10% in depth shall be repaired or replaced by new blades.

Improperly mixed concrete shall not be placed in the structure.

Job mix concrete shall be concrete mixed in an approved batch mixer, in accordance with the requirements stated above, adjacent to the structure for which the concrete is being mixed, and moved to the placement site in non-agitating equipment.

The use of ready-mixed concrete will be permitted provided the batching plant and mixer trucks meet the following requirements and the applicable requirements of ASTM C 94:

(a) All requirements otherwise specified for mixing on the job shall apply.

(b) Sufficient transit mix equipment shall be assigned exclusively to the project as required for continuous pours.

(c) Satisfactory evidence shall be furnished that the delivery of concrete shall be continuous at regular and uniform intervals, without stoppages or interruptions.

(d) Concrete shall not be placed on the job after a period of one and one-half (1 ½) hours, after the cement has been placed in the mixer.

When Trans-Mix Concrete is used, additional mortar (one sack cement, three parts sand and sufficient water) shall be added to the batch to coat the drum of the mixer or agitator truck. This shall be required for every load of Class C, F, H and S concrete only.

Delivery of concrete to the site of the work and its discharge from the truck mixer, agitator, or non-agitating equipment shall be in accordance with the requirements of Item, "Concrete Structures".

Hand mixing of concrete will be permitted only for small placements or in case of an emergency and then only on the authorization of the Owner's project Representative. Hand-mixed batched shall not exceed a two bag batch in volume.

11. Concrete Placement Methods

The concrete may be transported to the forms by buckets, chutes, buggies, belt conveyors, pumps or other acceptable methods such that the rate of placement approved by the Owner's Project Representative is maintained, and in accordance with Item, "Concrete Structures".

12. Measurement and Payment

The quantities of concrete of the various classifications as listed in the Proposal which constitute the complete and accepted structures will be measured by the cubic yard is place, except where other methods of measurements are provided in the Proposal. Only accepted work will be included and the dimensions used will be those shown on the Plans or ordered in writing by the Owner's Project Representative. No deductions in measurement will be made for paneling less than 3 inches in width by 1 inch depth for chamfers less than 2 inches, for embedded reinforcing steel, or for embedded portions of structural steel member. Deductions will be made for embedded portions of piling.

Payment for the concrete quantities, measured as provided above, will be paid for at the unit prices proposal per cubic yard for the various classifications for concrete shown, prices shall be full compensation for furnishing, hauling and mixing all concrete materials; placing, curing and finishing all concrete; all grouting and painting; except hereinafter provided; furnishing and placing metal flashing strips; and for all forms and falsework, labor. Tools equipment and incidental necessary to complete the work.

No separate payment will be made by the cubic yard for concrete used in a structure of other construction proposal items where measurement and payment is provided in the Proposal by the "Lump Sum", "Each", "Square Yard", "Square Foot", "Linear Foot" or other method as defined under the applicable Project Specification.

---END OF ITEM---

ITEM 440

REINFORCING STEEL

440.1. Description. Furnish and place reinforcing steel of the sizes and details shown on the plans.

440.2. Materials.

A. **Approved Mills.** Before furnishing steel, producing mills of reinforcing steel for the Department must be pre-approved in accordance with DMS-7320, "Qualification Procedure for Reinforcing Steel Mills," by the Construction Division, which maintains a list of approved producing mills. Reinforcing steel obtained from unapproved sources will not be accepted.

B. **Deformed Bar and Wire Reinforcement.** Unless otherwise shown on the plans, reinforcing steel must be Grade 60, and bar reinforcement must be deformed. Reinforcing steel must conform to one of the following:

- ASTM A 615, Grades 40 or 60;
- ASTM A 996, Type A, Grades 40 or 60;
- ASTM A 996, Type R, Grade 60, permitted in concrete pavement only (Furnish ASTM A 996, Type R bars as straight bars only and do not bend them. Bend tests are not required.); or
- ASTM A 706.

The provisions of this Item take precedence over ASTM provisions.

The nominal size, area, and weight of reinforcing steel bars covered by this Item are shown in Table 1. Designate smooth bars up to No. 4 by size number and above No. 4 by diameter in inches.

Table 1
Size, Area, and Weight of Reinforcing Steel Bars

Bar Size Number (in.)	Bar Size Number (mm)	Diameter (in.)	Area (Sq. in.)	Weight per Ft.
3	10	0.375	0.11	0.376
4	13	0.500	0.20	0.668
5	16	0.625	0.31	1.043
6	19	0.750	0.44	1.502
7	22	0.875	0.60	2.044
8	25	1.000	0.79	2.670
9	29	1.128	1.00	3.400
10	32	1.270	1.27	4.303
11	36	1.410	1.56	5.313
14	43	1.693	2.25	7.650
18	57	2.257	4.00	13.60

Note: Bar size numbers (in.) are based on the number of eighths of an inch included in the nominal diameter of the bar. Bar size numbers (mm) approximate the number of millimeters included in the nominal diameter of the bar.

C. **Smooth Bar and Spiral Reinforcement.** Smooth bars and dowels for concrete pavement must have a minimum yield strength of 60 ksi and meet ASTM A 615. For smooth bars that are larger than No. 3, provide steel conforming to ASTM A 615 or meet the physical requirements of ASTM A 36.

Spiral reinforcement may be smooth or deformed bars or wire of the minimum size or gauge shown on the plans. Bars for spiral reinforcement must comply with ASTM A 615, Grade 40; ASTM A 996, Type A, Grade 40; or ASTM A 675, Grade 80, meeting dimensional requirements of ASTM A 615. Smooth wire must comply with ASTM A 82, and deformed wire must comply with ASTM A 496.

D. **Weldable Reinforcing Steel.** Reinforcing steel to be welded must comply with ASTM A 706 or have a carbon equivalent (C.E.) of at most 0.55%. A report of chemical analysis showing the percentages of elements necessary to establish C.E. is required for reinforcing steel that does not meet ASTM A 706

to be structurally welded. These requirements do not pertain to miscellaneous welds on reinforcing steel as defined in Section 448.4.B.1.a, "Miscellaneous Welding Applications."

Calculate C.E. using the following formula:

$$C.E. = \%C + \frac{\%Mn}{6} + \frac{\%Cu}{40} + \frac{\%Ni}{20} + \frac{\%Cr}{10} - \frac{\%Mo}{50} - \frac{\%V}{10}$$

E. Welded Wire Fabric. For fabric reinforcement, use wire that conforms to ASTM A 82 or A 496. Use wire fabric that conforms to ASTM A 185 or A 497. Observe the relations shown in Table 2 among size number, diameter in inches, and area when ordering wire by size numbers, unless otherwise specified. Precede the size number for deformed wire with "D" and for smooth wire with "W."

Designate welded wire fabric as shown in the following example: 6 × 12 – W16 × W8 (indicating 6-in. longitudinal wire spacing and 12-in. transverse wire spacing with smooth No. 16 wire longitudinally and smooth No. 8 wire transversely).

Table 2
Wire Size Number, Diameter, and Area

Size Number (in.)	Size Number (mm)	Diameter (in.)	Area (sq. in.)
31	200	0.628	0.310
30	194	0.618	0.300
28	181	0.597	0.280
26	168	0.575	0.260
24	155	0.553	0.240
22	142	0.529	0.220
20	129	0.505	0.200
18	116	0.479	0.180
16	103	0.451	0.160
14	90	0.422	0.140
12	77	0.391	0.120
10	65	0.357	0.100
8	52	0.319	0.080
7	45	0.299	0.070
6	39	0.276	0.060
5.5	35	0.265	0.055
5	32	0.252	0.050
4.5	29	0.239	0.045
4	26	0.226	0.040
3.5	23	0.211	0.035
2.9	19	0.192	0.035
2.5	16	0.178	0.025
2	13	0.160	0.020
1.4	9	0.134	0.014
1.2	8	0.124	0.012
0.5	3	0.080	0.005

Note: Size numbers (in.) are the nominal cross-sectional area of the wire in hundredths of a square inch. Size numbers (mm) are the nominal cross-sectional area of the wire in square millimeters. Fractional sizes between the sizes listed above are also available and acceptable for use.

F. Epoxy Coating. Epoxy coating will be required as shown on the plans. Before furnishing epoxy-coated reinforcing steel, an epoxy applicator must be pre-approved in accordance with DMS-7330, "Qualification Procedure for Reinforcing Steel Epoxy Coating Applicators." The Construction Division maintains a list of approved applicators.

Coat reinforcing steel in accordance with Table 3.

Table 3
Epoxy Coating Requirements for Reinforcing Steel

Material	Specification
Bar	ASTM A 775 or A 934
Wire or fabric	ASTM A 884 Class A or B
Mechanical couplers	As shown on the plans
Hardware	As shown on the plans

Use epoxy coating material and coating repair material that complies with DMS-8130, "Epoxy Powder Coating for Reinforcing Steel." Do not patch more than 1/4 in. total length in any foot at the applicator's plant.

Epoxy-coated reinforcement will be sampled and tested in accordance with Tex-739-I.

Maintain identification of all reinforcing throughout the coating and fabrication and until delivery to the project site.

Furnish 1 copy of a written certification that the coated reinforcing steel meets the requirements of this Item and 1 copy of the manufacturer's control tests.

G. **Mechanical Couplers.** When mechanical splices in reinforcing steel bars are shown on the plans, use the following types of coupler:

- sleeve-filler,
- sleeve-threaded,
- sleeve-swaged, or
- sleeve-wedge.

Furnish only couplers that have been produced by a manufacturer that has been prequalified in accordance with DMS-4510, "Mechanical Couplers." Sleeve-wedge type couplers will not be permitted on coated reinforcing. Couplers for use on individual projects must be sampled and tested in accordance with DMS-4510. Furnish couplers only at locations shown on the plans.

440.3. Construction.

A. **Bending.** Cold-bend the reinforcement accurately to the shapes and dimensions shown on the plans. Fabricate in the shop if possible. Field-fabricate, if permitted, using a method approved by the Engineer. Replace improperly fabricated, damaged, or broken bars at no additional expense to the Department. Repair damaged or broken bars embedded in a previous concrete placement using a method approved by the Engineer.

Unless otherwise shown on the plans, the inside diameter of bar bends, in terms of the nominal bar diameter (d), must be as shown in Table 4.

Table 4
Minimum Inside Diameter of Bar Bends

Bend	Bar Size Number (in.)	Bar Size Number (mm)	Diameter
Bends of 90° and greater in stirrups, ties, and other secondary bars that enclose another bar in the bend	3, 4, 5	10, 13, 16	4d
	6, 7, 8	19, 22, 25	6d
Bends in main bars and in secondary bars not covered above	3 through 8	10 through 25	6d
	9, 10, 11	29, 32, 36	8d
	14, 18	43, 57	10d

Note: Bar size numbers (in.) are based on the number of eighths of an inch included in the nominal diameter of the bar. Bar size numbers (mm) approximate the number of millimeters included in the nominal diameter of the bar.

Where bending No. 14 or No. 18 Grade 60 bars is required, bend-test representative specimens as described for smaller bars in the applicable ASTM specification. Make the required 90° bend around a pin with a diameter of 10 times the nominal diameter of the bar.

B. Tolerances. Fabrication tolerances for bars are shown in Figure 1.

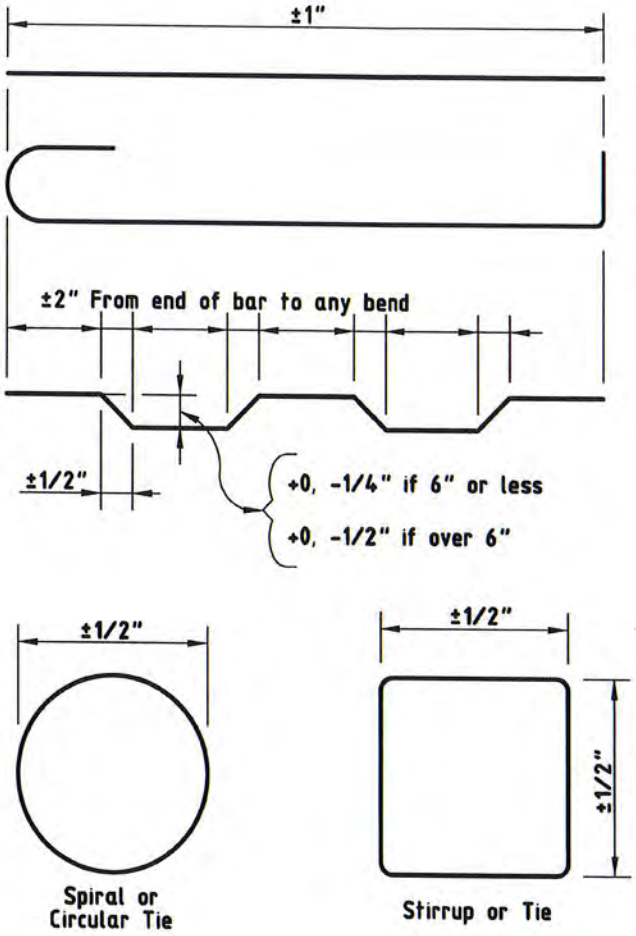

Figure 1
Fabrication tolerances for bars.

C. Storage. Store steel reinforcement above the ground on platforms, skids, or other supports, and protect it from damage and deterioration. Ensure that reinforcement is free from dirt, paint, grease, oil, and other foreign materials when it is placed in the work. Use reinforcement free from defects such as cracks and delaminations. Rust, surface seams, surface irregularities, or mill scale will not be cause for rejection if the minimum cross-sectional area of a hand wire-brushed specimen meets the requirements for the size of steel specified.

D. Splices. Lap-splice, weld-splice, or mechanically splice bars as shown on the plans. Additional splices not shown on the plans will require approval. Splices not shown on the plans will be permitted in slabs 15 in. or less in thickness, columns, walls, and parapets.

- Unless otherwise approved, splices will not be permitted in bars 30 ft. or less in plan length. For bars exceeding 30 ft. in plan length, the distance center-to-center of splices must be at least 30 ft. minus 1 splice length, with no more than 1 individual bar length less than 10 ft. Make lap splices

not shown on the plans, but otherwise permitted, in accordance with Table 5. Maintain the specified concrete cover and spacing at splices, and place the lap-spliced bars in contact, securely tied together.

Table 5
Minimum Lap Requirements for Bar Sizes through No. 11

Bar Size Number (in.)	Bar Size Number (mm)	Uncoated Lap Length	Coated Lap Length
3	10	1 ft. 4 in.	2 ft. 0 in.
4	13	1 ft. 9 in.	2 ft. 8 in.
5	16	2 ft. 2 in.	3 ft. 3 in.
6	19	2 ft. 7 in.	3 ft. 11 in.
7	22	3 ft. 5 in.	5 ft. 2 in.
8	25	4 ft. 6 in.	6 ft. 9 in.
9	29	5 ft. 8 in.	8 ft. 6 in.
10	32	7 ft. 3 in.	10 ft. 11 in.
11	36	8 ft. 11 in.	13 ft. 5 in.

Note: Bar size numbers (in.) are based on the number of eighths of an inch included in the nominal diameter of the bar. Bar size numbers (mm) approximate the number of millimeters included in the nominal diameter of the bar.

- Do not lap No. 14 or No. 18 bars.
- Lap spiral steel at least 1 turn.
- Splice welded wire fabric using a lap length that includes the overlap of at least 2 cross wires plus 2 in. on each sheet or roll. Splices using bars that develop equivalent strength and are lapped in accordance with Table 5 are permitted.
- For box culvert extensions with less than 1 ft. of fill, lap the existing longitudinal bars with the new bars as shown in Table 3. For extensions with more than 1 ft. of fill, lap at least 1 ft. 0 in.
- Ensure that welded splices conform to the requirements of the plans and of Item 448, "Structural Field Welding." Field-prepare ends of reinforcing bars if they will be butt-welded. Delivered bars must be long enough to permit weld preparation.
- Install mechanical coupling devices in accordance with the manufacturer's recommendations at locations shown on the plans. Protect threaded male or female connections, and make sure the threaded connections are clean when making the connection. Do not repair damaged threads.
- Mechanical coupler alternate equivalent strength arrangements, to be accomplished by substituting larger bar sizes or more bars, will be considered if approved in writing before fabrication of the systems.

E. Placing. Unless otherwise shown on the plans, dimensions shown for reinforcement are to the centers of the bars. Place reinforcement as near as possible to the position shown on the plans. In the plane of the steel parallel to the nearest surface of concrete, bars must not vary from plan placement by more than 1/12 of the spacing between bars. In the plane of the steel perpendicular to the nearest surface of concrete, bars must not vary from plan placement by more than 1/4 in. Cover of concrete to the nearest surface of steel must be at least 1 in. unless otherwise shown on the plans.

For bridge slabs, the clear cover tolerance for the top mat of reinforcement is −0, +1/2 in.

Locate the reinforcement accurately in the forms, and hold it firmly in place before and during concrete placement by means of bar supports that are adequate in strength and number to prevent displacement and to keep the steel at the proper distance from the forms. Support bars by standard bar supports with plastic tips, approved plastic bar supports, or precast mortar or concrete blocks when supports are in contact with removable or stay-in-place forms. Use bright basic bar supports to support reinforcing steel placed in slab overlays on concrete panels or on existing concrete slabs. Bar supports in contact with soil or subgrade must be approved.

For bar supports with plastic tips, the plastic protection must be at least 3/32 in. thick and extend upward on the wire to a point at least 1/2 in. above the formwork.

All accessories such as tie wires, bar chairs, supports, or clips used with epoxy-coated reinforcement must be of steel, fully coated with epoxy or plastic. Plastic supports approved by the Engineer may also be used with epoxy-coated reinforcement.

Cast mortar or concrete blocks to uniform dimensions with adequate bearing area. Provide a suitable tie wire in each block for anchoring to the steel. Cast the blocks to the thickness required in approved molds. The surface placed adjacent to the form must be a true plane, free of surface imperfections. Cure the blocks by covering them with wet burlap or mats for a period of 72 hr. Mortar for blocks should contain approximately 1 part hydraulic cement to 3 parts sand. Concrete for blocks should contain 850 lb. of hydraulic cement per cubic yard of concrete.

Place individual bar supports in rows at 4-ft. maximum spacing in each direction. Place continuous type bar supports at 4-ft. maximum spacing. Use continuous bar supports with permanent metal deck forms.

The exposure of the ends of longitudinals, stirrups, and spacers used to position the reinforcement in concrete pipe and in precast box culverts or storm drains is not cause for rejection.

Tie reinforcing steel for bridge slabs, top slabs of direct traffic culverts, and top slabs of prestressed box beams at all intersections, except tie only alternate intersections where spacing is less than 1 ft. in each direction. For reinforcing steel cages for other structural members, tie the steel at enough intersections to provide a rigid cage of steel. Fasten mats of wire fabric securely at the ends and edges.

Before concrete placement, clean mortar, mud, dirt, debris, oil, and other foreign material from the reinforcement. Do not place concrete until authorized.

If reinforcement is not adequately supported or tied to resist settlement, reinforcement is floating upward, truss bars are overturning, or movement is detected in any direction during concrete placement, stop placement until corrective measures are taken.

F. Handling, Placement, and Repair of Epoxy-Coated Reinforcing Steel.

1. **Handling.** Provide systems for handling coated reinforcement with padded contact areas. Pad bundling bands or use suitable banding to prevent damage to the coating. Lift bundles of coated reinforcement with a strongback, spreader bar, multiple supports, or a platform bridge. Transport the bundled reinforcement carefully, and store it on protective cribbing. Do not drop or drag the coated reinforcement.

2. **Construction Methods.** Do not flame-cut coated reinforcement. Saw or shear-cut only when approved. Coat cut ends as specified in Section 440.3.F.3, "Repair of Coating."

   Do not weld or mechanically couple coated reinforcing steel except where specifically shown on the plans. Remove the epoxy coating at least 6 in. beyond the weld limits before welding and 2 in. beyond the limits of the coupler before assembly. After welding or coupling, clean the steel of oil, grease, moisture, dirt, welding contamination (slag or acid residue), and rust to a near-white finish. Check the existing epoxy for damage. Remove any damaged or loose epoxy back to sound epoxy coating.

   After cleaning, coat the splice area with epoxy repair material to a thickness of 7 to 17 mils after curing. Apply a second application of repair material to the bar and coupler interface to ensure complete sealing of the joint.

3. **Repair of Coating.** For repair of the coating, use material that complies with the requirements of this Item and ASTM D 3963. Make repairs in accordance with procedures recommended by the manufacturer of the epoxy coating powder. For areas to be patched, apply at least the same coating thickness as required for the original coating. Repair all visible damage to the coating.

   Repair sawed and sheared ends, cuts, breaks, and other damage promptly before additional oxidation occurs. Clean areas to be repaired to ensure that they are free from surface contaminants. Make repairs in the shop or in the field as required.

440.4. Measurement and Payment. The work performed, materials furnished, equipment, labor, tools, and incidentals will not be measured or paid for directly but will be considered subsidiary to pertinent Items.

CRYSTALLINE CONCRETE WATERPROOFING

PART 1: GENERAL

1.01 SUMMARY

A. This section covers the requirements for waterproofing precast concrete manholes.

1.02 REFERENCES

A. American Society for Testing and Materials (ASTM)

B. Army Corp. of Engineers (CRD)

C. American Concrete Institute Reference 308

1.03 SYSTEM DESCRIPTION

A. The concrete waterproofing admixture shall be of the cementitious crystalline type that chemically controls and permanently fixes a non-soluble crystalline structure throughout the capillary voids of the concrete.

B. The design shall include the use of the crystalline waterproofing repair materials that generate a non-soluble crystalline formation in the concrete.

1.04 STORAGE, DELIVERY AND HANDLING

A. Store manufacturer's sealed and labeled material containers in dry, protected environment off the ground.

PART 2: PRODUCTS

2.01 MANUFACTURERS

A. Xypex Chemical Corporation, Richmond, B.C., Canada.

B. Equivalent materials as approved by the engineer 10 days prior to acceptance of bids.

2.02 MATERIALS

A. Xypex Admix C-1000-R containing red dye to ensure detection the concrete.

B. Xypex Concentrate

2.03 MIXES

A. The dosage rate for Xypex Admix C-1000-R is 3.5% by weight of cement.

PART 3: APPLICATION

3.01 MATERIALS PREPARATION

A. Xypex Admix C-1000-R must be added to the concrete at the time of batching. It is recommended that the Admix powder be added first to the rock and sand and blended thoroughly for 2 - 3 minutes before adding cement and water.

B. Blend total concrete mix using normal practices to ensure formation of homogeneous mixture.

C. For precast concrete manufacturers this usually means adding the Xypex C-1000-R into their pan type mixers.

D. For ready-mix batch plants the Xypex Admix C-1000-R can be evenly distributed on a plant conveyor belt carrying the rock and sand, or the dry powder Admix can be added to the truck first and then 30 - 50% of the required water for the concrete batch is dispensed along with 300 - 500 pounds of aggregate and mixed thoroughly for 2 - 3 minutes. The rest of the materials are then added to the truck and mixed for at least 5 minutes.

3.02 APPLICATION

A. Placement of concrete shall be in accordance with the Section 03300

B. Retardation of set may occur when using Xypex Admix C-1000-R. The amount of retardation will depend upon the concrete mix design and the dosage rate of the admix. Consult with the manufacturer regarding proper dosage rate.

C. Concrete that contains Xypex Admix C-1000-R must be cured as per "Standard for Curing Concrete" (ACI 308)

D. Normal backfilling procedures may be used after concrete has cured for at least 7 days.

E. After the base and joints of the precast manhole have been grouted, apply two coats of Xypex Concentrate to all grouted surfaces at a rate of 1.5 lbs. per square yard to a properly prepared surface in accordance with manufacturer's written instructions.

END OF SECTION

SECTION 2.11
FLEXIBLE BASE

2.11.1 DESCRIPTION:

This item shall consist of furnishing all materials, equipment, and labor to provide new flexible base to serve as the foundation course for the surface course. The base shall consist of new materials composed of caliche and stone materials and reconstructed materials incorporating the existing surface with the base course. The base course shall be constructed as herein specified in conformity to the typical sections shown on the Plans and to the lines and grades established by the Engineer.

2.11.2 NEW MATERIALS:

New material shall be obtained from approved sources. It shall consist of argillaceous limestone, calcareous of calcareous clay particles, with or without stone, conglomerate, gravel, sand or other granular materials. The material shall be approved by the Engineer at the source. All the acceptable material shall be screened, and the oversize shall be crushed and returned to the screened material in such a manner that a uniform product will be produced. The processed material, when properly slaked and tested by standard laboratory methods, shall meet the following requirements:

Passing 2" Screen	100%
Retained on 40 Mesh Sieve	50 to 85%
No More than 15% Passing the No. 200 Sieve	

The material passing the 40 mesh sieve shall be known as Soil Binder and shall meet the following requirements:

The Liquid Limit Shall Not Exceed	45
The Plasticity Index Shall Not Exceed	12
The Linear Shrinkage Shall Not Exceed	8.5%

2.11.3 CONSTRUCTION METHODS:

The primary requirement of this section is to secure a complete base course of the desired thickness and width indicated on the drawings. It shall be the responsibility of the Contractor to regulate the sequence of his work to provide public access to the areas currently served either through the job area or on approved temporary alternate routes. Alternate routes must be approved by the ENGINEER and marked by the Contractor prior to their use.

a. Preparation of Subgrade: In previously unpaved areas, the subgrade shall be prepared in conformity with the requirements of Sections 2.1 and 2.2.

b. Thickness: Where the base course exceeds 6 inches in thickness, it shall be constructed in two or more courses of equal thickness as indicated on the typical section.

c. Placing New Base: Immediately before placing the base course material, the subgrade shall be checked as to conformity with grade and section. The material shall be delivered in approved vehicles of a uniform capacity. It shall be the charge of the Contractor that the required amount of specified material shall be delivered to secure the proper thickness of the completed base course. Material deposited on the subgrade shall be spread and shaped the same day. All material shall be moved at least once from the original position in which it is deposited. In the event of inclement weather or other

unforeseen circumstances which render impracticable the spreading of the material during the first 24-hour period, the material shall be scarified and spread as directed by the OWNER. The material shall be sprinkled, if directed, and shall be bladed, dragged and shaped to conform to the typical section as shown on the Plans, and may be added to the reconstructed flexible base to provide the desired thickness.

d. Working and Shaping Flexible Base: The areas and "nests" of segregated course or final material shall be corrected and removed and replaced with well graded material as directed by the ENGINEER. If additional binder is considered desirable or necessary after the material is spread and shaped, it shall be furnished and applied in the amount directed by the ENGINEER. Such binder shall be carefully incorporated with the material in place by scarifying, harrowing, brooming or by other approved methods. The course shall be sprinkled as required and compacted to the extent necessary to provide not less than the percent density as hereinafter specified under "Density." In addition to the requirements specified for density, the full depth of flexible base shown on the plans shall be compacted to the extent necessary to remain firm and stable under construction equipment. After each section of flexible base is completed, tests, as necessary, shall be made by the OWNER unless otherwise specified in the special provisions or in the plans. If the material fails to meet the density requirements, it shall be reworked as necessary to meet these requirements.

   Throughout this entire operation, the shape of the course shall be maintained by blading. The surface, upon completion, shall be smooth and in conformity with the typical sections shown on the plans to the established lines and grades. On the surface on which pavement is to be placed, any deviation in excess of 1/2 inch in cross section and in a length of 16 feet measured longitudinally shall be corrected by lessening, adding more or removing material, reshaping and re-compacting by sprinkling and rolling. All irregularities, depressions or weak spots which develop shall be corrected immediately by scarifying the areas affected, adding suitable material as required, reshaping and re-compacting by sprinkling and rolling.

   Should the base course, due to any reason or cause, lose the required stability, density and finish before the surfacing is complete, it shall be re-compacted and refinished at the sole expense of the Contractor.

e. Density: The density required for subgrade and base shall not be less than 95 percent compaction as determined by ASTM D-698, at 0 to +4 of optimum moisture.

f. Courses: Paving types with flexible base under the curb and gutter shall be placed and compacted at the same time and in the same operation as the flexible base under the pavement. The flexible base shall be placed in two courses, as shown on the plans. The first course shall be placed and compacted under the curb and gutter and under the pavement. The curb and gutter shall then be built upon the first course. The final course of the flexible base shall be placed after sufficient time has elapsed as stated in Section 3.1 Concrete.

2.11.4 STEEL WHEEL ROLLER:

Steel wheel roller shall be of the three wheel, self-propelled type, weighing not less than 10 tons (9,000 kg) and shall provide a pressure on the rear wheel of not less than 325 pounds per linear inch (6 kg linear mm) of wheel width. All wheels shall be flat. Rear wheels shall have a diameter of not less than 48 inches and each shall have a tire width of not less than 20 inches.

2.11.5 TAMPING ROLLERS:

Tamping rollers shall consist of two metal rollers, drums or shell of not less than 40 inches in

diameter, each not less than 42 inches in length and unit mounted in a rigid frame in such a manner that each roller may oscillate independently of each other. Each roller, drum or shell shall be surmounted by metal studs with tamping feet projecting not less than 7 inches from the surface and spaced not less than 6 inches nor more than 10 inches measured diagonally center to center. The cross sectional area of each tamping foot shall be not less than 5 square inches.

The roller shall be equipped with cleaning teeth to provide self-cleaning. The roller shall be the type that by ballast loading, the load of each tamping blow may be varied uniformly from not less than 125 psi to 175 psi of cross sectional area. The Contractor may use heavier rollers with compression valves up to 500 psi approved by the ENGINEER. The load per tamping foot shall be determined by dividing the total weight of the roller by the number of tamping feet in a row parallel to or approximately parallel to the axis of the roller. The compression to be provided at any time shall be as directed by the OWNER. The tamping roller shall be drawn by approved power equipment of adequate tractive effort. Power equipment used for embankment construction shall be the crawler-type tractor. Two tamping rollers consisting of four cylinders, conforming to the previously prescribed requirements, drawn by approved power equipment, shall be considered as a roller unit.

2.11.6 PNEUMATIC TIRE ROLLER:

Tire rollers shall consist of not less than nine pneumatic-tired wheels, running on axles in such a manner that the rear group of tires shall not follow in the tracts of the forward group of tires, and mounted in a rigid frame. They shall be of the type suitable for ballast loading. The distance between the front and rear axles shall be not less than 5 feet nor more than 10 feet. The front axle shall be attached to the frame in such a manner that the roller may be turned in a practical circle. The pneumatic tire roller shall have an effective rolling width of approximately 60 inches. It shall be so designed that, by ballast loading, the load may be varied uniformly from not less than 100 pounds per inch of width of tire tread to 325 pounds per inch of tire tread. The Contractor may use a heavier roller with wheel bases up to 18 feet when approved by the ENGINEER. The pressure of the tires and the compression to be provided shall be as directed by the ENGINEER. The roller under working conditions shall provide a uniform compression under all wheels. The total combined width of effective tire treads shall be not less than 85 percent of the effective roller widths. The pneumatic tire roller shall be drawn by either an approved crawler-type tractor or, a pneumatic tire tractor, or a truck of adequate tractive effort; or may be self-propelled, and the roller, when drawn or propelled by either type of equipment shall be considered a pneumatic tire roller unit.

2.11.7 VIBRATORY ROLLERS:

Rollers with vibrating drums may be used for compaction of embankment or subgrades when approved by the ENGINEER.

2.11.8 ROLLING METHODS:

The embankment, subgrade, or base course shall be sprinkled as required to meet the moisture requirements established by the Engineer.

Rolling shall start longitudinally at the sides and proceed toward the center, overlapping on successive trips at least one-half the width of the rear wheel on the power roller, one-half the width of the tamping roller unit and one-half the width of the pneumatic roller unit. Alternate trips of the roller shall be slightly different in length, and rolling shall continue until ordered to stop by the OWNER. On super-elevated curves, rolling shall begin low side and progress to the high side.

The speed of the power roller and the tamping roller unit, unless otherwise directed by the ENGINEER, shall be between two and three miles per hour. The speed of the pneumatic tire

unit, unless otherwise directed by the ENGINEER, shall be between 4 and 12 miles per hour for asphalt surfacing work and between two and six miles per hour for all other compaction.

2.11.9 MEASUREMENT AND PAYMENT:

Work and accepted materials as specified for this item shall be measured and paid for as follows:

New flexible base shall be measured by the square yard in place and paid for at the unit bid price "New Flexible Base (Delivered)." This price shall be full compensation for all materials and work required relating to this item, including preparation of subgrade, furnishing of material, hauling, blading, sprinkling, compacting and the furnishing of all labor and equipment necessary to complete the work.

SECTION 2.5
GRAVITY FLOW PIPING & APPURTENANCES

2.5.1 SCOPE

a. This section governs materials, installation procedures and appurtenances for underground piping through which gravity flow of water, storm water and wastewater takes place. Trenching and backfill for the installation of underground pipes is covered in another section of the Specifications. Pressure piping is also covered in another section.

2.5.2 PIPING MATERIALS AND JOINTING SYSTEMS

a. The pipe used shall be of the type indicated on the Drawings and/or defined in the Proposal. All pipe shall be of quality construction and free from defect in materials and workmanship. All pipe will be inspected for compliance with these specifications before acceptance.

1. *Vitrified Clay Pipe*

(a) Pipe and fittings shall conform with ASTM C-700 and shall be extra-strength, glazed or unglazed, with factory-fabricated bell and spigot compression joints or with plain end pipe and compression couplings with factor-fabricated compression joints conforming with ASTM C-425.

2. *Polyvinyl Chloride Pipe*

(a) Pipe and fittings shall conform with the requirements of ASTM D-3033 or ASTM D-3034 and shall have a wall thickness as defined by the Standard Dimension Ratio (SDR) of not greater than SDR 35. Joints shall utilize factory-installed elastomeric gaskets in bells or sleeve couplings, at the Contractor's option. Joints shall meet the requirements of ASTM D-3212. No solvent-cement joints shall be used.

3. *Ductile Iron Pipe and Fittings*

(a) Unless otherwise shown on the Drawings or in the Proposal, all ductile iron pipe and fittings shall be not less than Class 52 wall thickness, shall have push-on joints, and shall have bituminous coatings on the exterior surfaces and cement-mortar linings with seal coats conforming with ANSI A21.4 (AWWA C104) on the inside surfaces.

(b) Pipe and fittings shall conform to the pertinent requirements in ANSI A21.10 (AWWA C110), ANSI A21.11 (AWWA C111), ANSI A21.50 (AWWA C150) and ANSI A21.51 (AWWA C151). Flanged pipe shall be in conformance with ANSI A21.15 (AWWA C115) with wall thickness not less than Class 53, and shall have 125 pound flanges.

(c) Polyethylene sleeves 8 mils thick shall be provided and installed on all ductile iron pipe and installed in accordance with ANSI A21.5 (AWWA C105) for protection against corrosive soil conditions.

(d) The interior of the pipe shall be lined with polyethylene powders complying with ASTM D1248, heat fused and bonded into place to a thickness of not less than 20 mils, in lieu of cement-mortar lining when so shown on the Drawings or in the Proposal.

4. *Reinforced Concrete Pipe*

(a) The pipe shall conform to the requirements of ASTM C76 and, unless otherwise shown, shall be Class III, with minimum Wall "B" thickness. All pipe shall be machine made by a process which will provide for uniform placement of zero slump concrete in the form, and compaction by mechanical devices which will assure a dense concrete in the finished product.

(b) Fittings such as bends, wyes and tees shall be manufactured on machines and in the

same manner as the straight sections heretofore described.

(c) Pipe joints may be bell and spigot configuration using rubber o-rings conforming to ASTM C443 or tongue and groove configuration using flexible plastic gasket strips conforming to Federal Specification §-S-210A or equal at the Contractor's option except when a particular type joint is called for on the Drawings. In any case, the type of joint and gasket to be used shall be subject to approval by the Engineer prior to installation.

5. *Corrugated Steel Pipe*

(a) The corrugated steel pipe shall be dimensioned as shown on the Drawings and shall conform to the requirements of AASHTO M36, AASHTO M190, AASHTO M218 and AASHTO M274. The pipe shall be 0.064 minimum thickness with 2-2/3-inches by ½-inch corrugations. The pipe shall be fully coated inside and outside with a minimum 0.05-in hot dip coating of a bitumastic asphalt material. All coating shall conform to AASHTO M190 Type C coating. Pipe shall be as manufactured by Armco Steel Corporation, or approved equal.

(b) Connecting bands shall be a minimum of 16 gauge and shall be 12-in or 24-in wide Hugger Joint, or approved equal.

(c) Provide beveled end section with standard connecting band.

2.5.3 PIPE INSTALLATION

a. *General Procedures*

1. All pipe shall be installed in accordance with the manufacturer's recommendations except as may be shown on the Drawings or in these Specifications. Bedding, embedment or encasement shall be as shown on the Drawings. Bedding shall be either Class I, II or III as provided in ASTM D2321. Care shall be taken that the bottom quadrant of the pipe barrel rests on and is uniformly supported by the bedding or embedment. Bell holes shall be made and refilled after installation as is required to avoid concentrated loadings on the bells.

2. Where the location of the sewer is not clearly defined by dimensions on the Drawings, the sewer shall not be closer horizontally than ten feet to a water supply main. Where gravity-flow sewers cross above water lines, the sewer pipe for a distance of nine feet each side of the crossing shall be cast-iron, without any joint closer horizontally than nine feet to the crossing, or shall be fully encased in concrete. The thickness of the concrete encasement including that around the pipe bells shall be not less than four inches.

3. The trench shall be shaped and prepared as directed in another section of these specifications. Pipe laying shall proceed up-grade with the spigot ends of bell-and-spigot pipe pointing in the direction of flow. Each pipe shall be laid true to line and grade and in such manner as to form a close concentric joint with the adjoining pipe and to prevent sudden offsets of flow line except at pipe size changes where the crown elevations shall match.

4. As the work progresses, the interior of the sewer shall be cleared of all dirt and superfluous materials of every description. Where cleaning after laying is difficult because of small pipe size, a suitable swab or drag shall be kept in the pipe and pulled forward past each joint immediately after the joining has been completed. If the maximum width of the trench at the top of the pipe as shown on the details or described in these Specifications is exceeded for any other reason than by order of the Engineer, the Contractor shall install, at his own expense, such concrete cradling, pipe encasement, or other bedding as may be required by the Engineer to support the added load of the backfill.

5. Trenches shall be kept free from water until the pipe jointing has been completed, and pipe shall not be laid when the condition of the trench or the weather is unsuitable for such

work. At times when work is not in progress, open ends of the pipe and fittings shall be securely closed to the satisfaction of the Engineer so that no trench water, earth, or other substance will enter the pipe or fittings.

6. When installing pipe with the use of a trench box, care should be taken to prevent the loss of bedding material which can result in excessive deflection of the pipe. Therefore, when using a trench box, the bottom of the box should not extend below the mid-diameter of the pipe.

b. Separation Between Sewer Lines and Water Lines

1. The Contractor shall follow these rules regarding separation distances between potable water lines and sanitary sewer lines.

   (a) Water line/new sewer line separation. When new sanitation sewers are installed, they shall be installed no closer to water lines than nine feet in all directions. Sewers that parallel water lines must be installed in separate trenches. Where the nine foot separation distance cannot be achieved, the following guidelines will apply:

      (1) Where a sanitary sewer parallels a water line, the sewer shall be constructed of cast iron, ductile iron or PVC meeting ASTM specifications with a pressure rating for both the pipe and joints of 150 psi. The vertical separation shall be a minimum of two feet between outside diameters and the horizontal separation shall be a minimum of four feet between outside diameters. The sewer shall be located below the water line.

      (2) Where a sanitary sewer crosses a water line and the sewer is constructed of cast iron, ductile iron, or PVC with a minimum pressure rating of 150 psi, an absolute minimum distance of 6 inches between outside diameters shall be maintained. In addition the sewer shall be located below the water line where possible and one length of the sewer pipe must be centered on the water line.

      (3) Where a sewer crosses under a water line and the sewer is constructed of ABS truss pipe, similar semi-rigid plastic composite pipe, clay pipe or concrete pipe with gasketed joints, a minimum two foot separation distance shall be maintained. The initial backfill shall be cement stabilized sand (two or more bags of cement per cubic yard of sand) for all sections of sewer within nine feet of the water line. This initial backfill shall be from one quarter diameter (but not less than 12 inches) above the top of the pipe.

      (4) Where a sewer crosses over a water line all portions of the sewer within nine feet of the water line shall be constructed of cast iron, ductile iron, or PVC pipe with a pressure rating of at least 150 psi using appropriate adapters. In lieu of this procedure the new sewer may be encased in a joint of 150 psi pressure class pipe, at least 18 feet long and two nominal sizes larger than the new sewer. The new sewer pipe shall be supported inside the pipe encasement at 5 feet intervals with spacers, or the space between the sewer pipe and the pipe encasement shall be filled to the spring line with washed sand. The encasement pipe shall be centered on the pipe crossings and both ends shall be sealed with cement grout or a manufactured seal.

   (b) Water line/manhole separation.

      (1) Unless sanitary sewer manholes and the connecting sewer can be made watertight and tested for no leakage, they shall be installed so as to provide a minimum of nine feet of horizontal clearance from an existing or proposed water line. Where the nine foot separation distance cannot be achieved, a carrier pipe as described in Section 2.5.3 b.1.(a) (4) may be used where appropriate.

c. *Bored Crossings*

1. Piping which is to cross railroad or highway right-of-way shall be installed by boring and jacking when shown on the Drawings. The construction methods and special requirements for boring and jacking will be dictated by the permit requirements of the right-of-way-owner. In the case of the Texas Department of Transportation, boring and jacking will conform to requirements of Item 476 of the *Texas Department of Transportation Standard Specifications for Construction of Highways, Streets and Bridges, 1993.*

2. If railroad and/or highway Specifications call for the pipe to be encased, the case shall be bituminous coated, asbestos-bonded corrugated steel pipe or smooth steel pipe. Used steel casing in good condition may be used with the approval of the Engineer.

3. The casing shall be installed by boring a hole not more than one inch larger than the outside diameter of the casing and jacking the casing into place. The carrier pipe shall then be made up and pushed through the casing pipe, being supported with **raci** spacers for pipelines cased crossings (1-800-601-RACI) or approved equal. The maximum distance between spacers should be six (6) feet for carrier pipes under 36 inches in diameter. For larger diameter carrier pipes use the manufacturer's recommendations. When in place there shall be no contact between the carrier and casing pipes.

4. The casing shall be of the size and gage as shown on the Drawings. Grouting of the annular spaces shall be in accordance with the requirements of the right-of-way owner and as shown on the plans. All work shall be accomplished in accordance with the permit grantor's requirements.

2.5.4 TESTING OF INSTALLED PIPE

a. *Testing Requirements*

1. All testing shall conform to the Texas Commission on Environmental Quality (TCEQ) Chapter 317 latest regulations.

2. All testing shall be witnessed by the Engineer or the Engineer's appointed Representative. Certification by the Engineer that all tests have been completed and that all sections of pipe have passed is required by the TCEQ.

3. The Engineer or his appointed representative will record and maintain the results of all testing. The Contractor shall provide personnel, as required, to assist the Engineer or his appointed representative in collecting and maintaining testing records. Copies of the testing records will be provided to the Contractor and the Owner at regular intervals by the Engineer.

4. The Contractor shall be responsible for keeping an up to date and clear copy of the testing records, provided by the Engineer, on site for inspection by the Owner, the TWDB, or other authorized parties.

b. *Infiltration, Exfiltration or Low Pressure Air Testing*

1. An infiltration, exfiltration, or low pressure air test shall be performed on all newly installed pipe.

(a) *Infiltration or Exfiltration Testing*

(1) The total exfiltration as determined by a hydrostatic head test, shall not exceed 50 gallons per inch diameter per mile of pipe per 24 hours at a minimum test head of two feet above the crown of the pipe at the upstream manhole.

(2) When pipes are installed below the groundwater level an infiltration test shall be used in lieu of the exfiltration test.

(3) The total infiltration, as determined by a hydrostatic head test, shall not exceed 50 gallons per inch diameter per mile of pipe per 24 hours at a minimum test head of two feet above the crown of the pipe at the upstream manhole, or at least two feet above existing groundwater level, whichever is greater.

(4) For construction within the 25 year flood plain, the infiltration or exfiltration shall not exceed 10 gallons per inch diameter per mile of pipe per 24 hours at the same minimum test head. If the quantity of infiltration or exfiltration exceeds the maximum quantity specified, remedial action shall be undertaken in order to reduce the infiltration or exfiltration to an amount within the limits specified.

(b) Low Pressure Air Test

(1) The test shall conform to the procedures described in ASTM C-828, ASTM C-924, ASTM F-1417 or other appropriate procedures, except for the testing times.

(2) The test shall be made with equipment manufactured and designed for low pressure air testing of gravity flow systems and shall be approved by the Engineer. All air shall pass through a single control panel equipped with sufficient valves and gauges to monitor air pressure and control the flow of air at all times.

(3) Pneumatic plugs shall have a sealing length equal to or greater than the diameter of the pipe to be tested and when installed shall resist internal test pressures without requiring external bracing or blocking.

(4) All pneumatic plugs shall be seal tested before being used in the actual test installation. One section of pipe shall be laid on the ground and sealed at both ends with the pneumatic plugs to be checked. The sealed pipe shall then be pressurized to 4 psig. The plug shall hold against this pressure without movement of the plugs and without appreciable loss of pressure.

(5) After the reach of pipe to be tested has been backfilled to a depth adequate to prevent movement of the pipe, all extraneous matter removed from the pipe interior, and the pneumatic plugs checked by the above procedure, the plugs shall be placed in each end of the segment of line to be tested. Plug also the ends of all branches of tees and wyes. All plugs shall be pressurized and low pressure air shall be introduced into the sealed section of pipe through one of the pneumatic plugs equipped with facilities for this purpose until the internal air pressure reaches 4 psig.

(6) After two minutes have been allowed for air pressure to stabilize, the supply of air to the reach of line being tested shall be shut off. The sewer will be deemed acceptable if the time required for the pressure to decrease from 3.5 to 2.5 psig shall not be less than the time computed by the following equation:

$T = 0.0850(D)(K)/(Q)$ where

T = time for pressure to drop 1.0 psi gauge in seconds
K = 0.000419(D)(L), but not less than 1.0
D = average inside diameter in inches
L = length of line of same pipe size in feet
Q = rate of loss, assume 0.0015 ft^3/min/sq ft internal surface

(7) Since a K value of less than 1.0 shall not be used, there are minimum times for each pipe diameter as shown in the following table

Pipe Diameter (Inches)	Minimum Time (Seconds)	Length for Minimum Time (feet)	Time for Longer Length (Seconds)
6	340	398	0.855(L)
8	454	298	1.520(L)
10	567	239	2.374(L)
12	680	199	3.419(L)
15	850	159	5.342(L)
18	1020	133	7.693(L)
21	1190	114	10.471(L)
24	1360	100	13.676(L)
27	1530	88	17.309(L)
30	1700	80	21.369(L)
33	1870	72	25.856(L)

c. *DEFLECTION TEST, FLEXIBLE CONDUITS*

1. Deflection testing shall be performed on all flexible pipes in the collection system.

2. Thirty (30) days after installation, backfilling, compaction and prior to acceptance, the Contractor shall pull through the pipe a mandrel of a diameter not less than 95% of the Inside Diameter (I.D.) of the pipe being tested. This test is to be performed by hand, mechanical assist devices will not be allowed.

3. In any area, where deflections exceed 5.0 percent of the ID of the pipe, the backfill shall be removed and replaced in accordance with the Specifications. If, in the opinion of the Engineer, the pipe has been damaged by over-deflection, the pipe shall be removed and replaced with new pipe, installed and backfilled in accordance with the Specifications. After these steps have been taken and the final backfill has been in place and additional thirty (30) days a deflection re-test shall be performed.

4. The equipment to make the above test shall meet the requirements of the TCEQ and be approved by the Engineer.

d. *Expenses for Testing*

1. The Contractor shall furnish all material, equipment and personnel to perform all the required tests. Cost of testing shall be included in other work with no separate pay item for testing.

2. If any pipe reaches or segments tested fail to meet the regulations, the Contractor shall determine at his own expense the source of such failure. He shall then repair, replace, or remedy all defective materials and/or workmanship at his own expense, and re-test. No payments will be made for that reach of pipe until the tests have been successfully completed.

2.5.5 APPURTENANCES

a. *Manholes*

1. At the Contractor's option, manholes shall be pre-cast concrete sections, unless otherwise required on the Drawings or in the Proposal. The minimum inside diameter of the manholes below the cones shall be 48 inches.

2. Precast reinforced concrete manhole sections shall be manufactured in accordance with ASTM C478 with bell and spigot groove type joints and O-Ring rubber gaskets or tongue and groove joints sealed with a plastic gasket material conforming to Federal Specification §-S-210A.

3. Pipes entering manholes shall use ASTM-923 watertight seals with size on size resilient connectors allowing for settlement of the manhole.

4. Manhole bases shall have a "U" shaped inverts with a channel depth of half the pipe diameter.

5. Cast iron frames and covers shall comply with the requirements of ASTM A48, shall be have machined bearing surfaces, shall be designed for installation in roads and streets, shall weigh not less than 300 pounds, and shall have the word "Sanitary Sewer" cast on the covers. Pick slots or other such means shall be provided for lifting the covers. Pick holes and vent holes are not acceptable.

6. Waterproof frames and covers shall be furnish and installed on manholes at the locations shown on the Drawings. In addition to meeting the requirements described above, the waterproof frames and covers shall be equipped with elastomeric gaskets and not less than four (4) non-corrosive hexagonal-head cap screws to mechanically hold and seal the cover in place and prevent entrance of surface water flooded over the top of the manhole. All such frames and covers shall be approved by the Engineer before installation.

7. *Manhole Testing*: All manholes shall be tested for leakage separately and independently of the wastewater lines by hydrostatic exfiltration testing or vacuum testing. All tests shall be performed in the presence of the Engineer or his appointed representative. If a manhole fails the leakage test the manhole shall be made watertight and retested by the Contractor at his own expense. No payments will be made for a manhole until the tests have been successfully completed.

a. *Hydrostatic Exfiltration Testing*: The maximum allowable leakage for Hydrostatic Exfiltration testing shall be 0.025 gallons per foot of manhole diameter per foot of manhole depth per hour. Hydrostatic exfiltration testing shall be performed as follows: all wastewater lines coming into the manhole shall be sealed with and internal pipe plug, then the manhole shall be filled with water and maintained full for at least one hour. For concrete manholes a wetting period of 24 hours may be used prior to testing to allow saturation of the concrete.

b. *Vacuum Testing* - Procedure: Manholes shall be tested with all connections in place. Lift holes shall be plugged, and all drop-connections and gas sealing connections shall be installed prior to testing. The sewer lines entering the manhole shall be plugged and braced to prevent the plugs from being drawn into the manhole. The plugs shall be installed in the lines beyond the drop-connections, gas sealing connections, etc. The test head shall be placed inside the frame at the top of the manhole and inflated in accordance with the manufacturer's recommendations. A vacuum of ten inches of mercury (10"Hg) shall be drawn and the vacuum pump will be turned off. The required test time shall be determined from Table I below in accordance with ASTM C 1244-93:

TABLE I
MINIMUM TIME REQUIRED FOR VACUUM DROP OF 1" Hg (10"Hg - 9"Hg) SEC

Depth of MH, (ft.)	48" Dia. Manhole	60" Dia. Manhole
0 to 16'	40 sec.	52 sec.
18'	45 sec.	59 sec.
20'	50 sec.	65 sec.
22'	55 sec.	72 sec.
24'	59 sec.	78 sec.
26'	64 sec.	85 sec.
28'	69 sec.	91 sec.
30'	74 sec.	98 sec.
For Each Additional 2'	Add 5 sec.	Add 6 sec.

b. *Vacuum Testing* - Acceptance: The manhole shall be considered acceptable, if the drop in the level of vacuum is less than one-inch of mercury (1"Hg) after the required test time. Any manhole which fails to pass the initial test must be repaired with a suitable material which conforms to the construction material of the manhole. The manhole shall be retested as described above until it has successfully passed the test. Following completion of a successful test, the manhole shall be restored to its normal condition, all temporary plugs shall be removed, all braces, equipment, and debris shall be removed and disposed of in a manner satisfactory to the Engineer.

c. *Vacuum Testing* - Payment: Payment for vacuum testing of sanitary sewer manholes shall be paid at the contract price per each vacuum test. This price shall include all material, labor, equipment and all incidentals, including all bypass pumping, required to complete the test as specified herein.

c. *Expenses for Testing*: The Contractor shall furnish all material, equipment and personnel to perform the hydrostatic exfiltration or vacuum tests. Cost of testing shall be included in other work with no separate pay item for testing.

a. *Drop Connections:* The State Design Criteria requires a drop pipe assembly to be installed in a manhole when the pipe entering the manhole is higher than 2' above the invert.

c. *Fittings*

a. Fittings, such as wyes, tees and bends, shall be factory-fabricated and shall be made of the same materials and shall have the same type of compatible joints as the pipe line in which they are installed. They shall be installed at the locations indicated on the Drawings or as directed by the Engineer.

b. Wyes or tees shall be capped or plugged for future house service line connection, or connected to existing house service lines remaining in service.

c. House service lines shall be extended from the Wye or Tee to the property line and shall be capped or plugged to provide for future service line connections where shown on the plans or defined in the proposal.

d. Connectors and Adapters

a. Elastomeric flexible connectors and/or adapters meeting the requirements of ASTM C425, with stainless steel tightening bands, may be used for making closures between two sections of pipe of like or dissimilar materials and, when approved, of different diameters.

e. Cleanouts

a. Cleanouts shall be constructed in accordance with the details and locations shown on the Drawings. Riser pipe shall be of the same material as that of the pipe line in which they are installed unless otherwise shown. The cost of the riser pipe (whatever length), concrete, all fittings and the cast iron boot shall be included in the cost of constructing the cleanout.

d. MEASUREMENT AND PAYMENT

a. Unless separate pay items are listed in the Proposal, the price of gravity flow pipeline and appurtenances shall be included in the Unit Price quoted for each linear foot of pipeline constructed, or the Lump Sum Price for the item within which the pipeline or appurtenances are incorporated. Payment of the Unit Price or Lump Sum shall be compensation in full to furnish, install and complete the work in place as shown on the Drawings and described in the Contract Documents.

*** END OF SECTION 2.5 ***

SECTION 05500

METAL FABRICATIONS

PART 1 - GENERAL

1.1 RELATED DOCUMENTS

A. Drawings, Standard General Conditions of the Construction Contract Funding Agency Edition, Supplemental Contract Conditions, and Division 1 – General Requirements apply to Work of this Section.

1.2 SECTION INCLUDES

A. Shop fabricated ferrous metal items, prime painted and galvanized finishes where applicable.

1.3 RELATED SECTIONS

A. Section 03300 - Concrete Work: Placement of metal fabrications and anchors in concrete.
B. Section 04200 - Unit Masonry: Placement of metal fabrications in masonry.
C. Section 09900 - Painting: Paint finish.

1.4 REFERENCES

A. ASTM A36 - Structural Steel.
B. ASTM A123 - Zinc (Hot-Galvanized) Coatings on Products Fabricated From Rolled, Pressed and Forged Steel Shape, Plate, Bars and Strips.
C. ASTM A283 - Carbon Steel Plates, Shapes, and Bars.
D. ASTM A307 - Carbon Steel Externally Threaded Standard Fasteners.
E. ASTM A386 - Zinc Coating (Hot Dip) on Assembled Steel Products.
F. AWS A2.0 - Standard Welding Symbols.
G. AWS D1.1 - Structural Welding Code.

1.5 SUBMITTALS

A. Submit under provisions of Section 01300.
B. Miscellaneous Metals Shop Drawings: Indicate profiles, sizes, connection attachments, reinforcing, anchorage, size and type of fasteners, and accessories. Include erection drawings, elevations, and details where applicable.
C. Indicate welded connections using standard AWS A2.0 welding symbols. Indicate net weld lengths.
D. Wrought Iron Gate: Submit gate design for review showing framing member size, hinges and other engineering information for gate of this size.

1.6 QUAILTY ASSURANCE

A. Installer Qualifications: An experienced installer who has completed post mounted gates similar in material, design, and extent to that indicated for this Project and whose work has resulted in construction with a record of successful in-service performance.
B. Welding: Qualify procedures and personnel according to AWS D1.1, "Structural Welding Code--Steel," and AWS D1.3, "Structural Welding Code--Sheet Steel."

1.7 FIELD MEASUREMENTS

A. Verify that field measurements are as indicated on shop drawings.

1.8 SEQUENCING

A. Inserts and Anchorage: Furnish inserts and anchoring devices which must be set in concrete for installation of miscellaneous metal work. Provide setting drawings, templates, instructions and directions for installation of anchorage devices. Coordinate delivery with other work to avoid delay.

PART 2 - PRODUCTS

2.1 MATERIALS

A. Steel Sections: ASTM A36.
B. Plates: ASTM A283.
C. Bolts, Nuts, and Washers: ASTM A325.
D. Welding Materials: AWS D1.1; type required for materials being welded.
E. Shop and Touch-Up Primer: SSPC 15, Type 1, red oxide.
F. Touch-Up Primer for Galvanized Surfaces: Zinc rich type.

2.2 FABRICATION

A. Fit and shop assemble in largest practical sections, for delivery to site.
B. Fabricate items with joints tightly fitted and secured.
C. Seal joined members by intermittent welds.
D. Grind exposed joints flush and smooth with adjacent finish surface. Make exposed joints butt tight, flush, and hairline. Ease exposed edges to small uniform radius.
E. Exposed Mechanical Fastenings: Flush countersunk screws or bolts; unobtrusively located; consistent with design of component, except where specifically noted otherwise.
F. Supply components required for anchorage of fabrications. Fabricate anchors and related components of same material and finish as fabrication, except where specifically noted otherwise.

2.3 FINISHES

A. Prepare surfaces to be primed in accordance with SSPC SP 2.
B. Do not prime surfaces in direct contact with concrete or where field welding is required.
C. Prime paint items with one coat. All exposed steel shall be painted according to specifications after being properly primed.
D. Galvanize in accordance with ASTM A123 Structural Steel Members. Provide minimum 1.25 oz/sq. ft. galvanized coating.

PART 3 - EXECUTION

3.1 EXAMINATION

A. Verify that field conditions are acceptable and are ready to receive work.
B. Beginning of installation means erector accepts existing conditions.

3.2 PREPARATION

A. Clean and strip primed steel items to bare metal where site welding is required.
B. Supply items required to be cast into concrete or embedded in masonry with setting templates, to appropriate sections.

3.3 INSTALLATION

A. Install items plumb and level, accurately fitted, free from distortion or defects.
B. Allow for erection loads, and for sufficient temporary bracing to maintain true alignment until completion of erection and installation of permanent attachments.
C. Field weld components indicated on shop drawings. Perform field welding in accordance with AWS D1.1
D. Obtain Architect/Engineer approval prior to site cutting or making adjustments not scheduled.
E. After erection, prime or re-galvanize welds, abrasions and surfaces not shop primed or galvanized, except surfaces to be in contact with concrete.

3.4 ERECTION TOLERANCES

A. Maximum Offset From True Alignment: 1/4 inch per 10 feet.

3.5 DISSIMILAR MATERIALS

A. Where dissimilar metals are in contact, or absorptive materials subject to wetting, the surfaces shall be protected with a coat of bituminous paint conforming to Military Specification MIL-C-18480 or to Federal Specification TT-V-51, unless otherwise specified, to prevent galvanic or corrosive action.
B. Aluminum surfaces to be placed in contact with steel shall be given one coat of zinc chromate primer in accordance with United States Joint Army-Navy Specification Jan-P-735 or approved equal. The steel surfaces to be placed in contact with aluminum shall be paint with a good quality primer.
C. Aluminum surfaces to be placed in contact with wood, concrete or masonry construction, except where the aluminum is to be imbedded in concrete, shall be given a heavy coat of an alkali-resistant bituminous paint before installation. The bituminous paint used shall meet the requirements of United States Military Specification MIL-P_6883. The paint shall be applied as it is received from the manufacturer without the addition of any thinner.
D. Aluminum surfaces to be imbedded in concrete shall, before installation, be given one coat of zinc chromate primer in accordance with United States Joint Army-Navy Specification JAN-P-735 or the equivalent. The paint shall be allowed to dry before the aluminum is placed in the concrete.

3.6 PAYMENT

A. Payment for all work performed in this section will be included in the lump sum price for the Facility as shown in the proposal. Such payment shall be complete compensation for the complete performance of the work in accordance with the drawings and the provisions of these specifications.

END OF SECTION

MOBILIZATION

Description. Establish and remove offices, plants, and facilities. Move personnel, equipment, and supplies to and from the project or the vicinity of the project site to begin work or complete work on Contract Items.

Measurement. This Item will be measured by the lump sum as the work progresses.

Payment. Partial payments of the lump sum bid for mobilization will be as follows. The adjusted Contract amount for construction Items as used below is defined as the total Contract amount less the lump sum for mobilization.

A. Payment will be made upon presentation of a paid invoice for the payment bond, performance bond, and required insurance. The combined payment for bonds and insurance will be no more than 10% of the mobilization lump sum or 1% of the total Contract amount, whichever is less.

B. Payment will be made upon verification of documented expenditures for plant and facility setup. The combined amount for all these facilities will be no more than 10% of the mobilization lump sum or 1% of the total Contract amount, whichever is less.

C. When 1% of the adjusted Contract amount for construction Items is earned, 50% of the mobilization lump sum bid or 5% of the total Contract amount, whichever is less, will be paid. Previous payments under this Item will be deducted from this amount.

D. When 5% of the adjusted Contract amount for construction Items is earned, 75% of the mobilization lump sum bid or 10% of the total Contract amount, whichever is less, will be paid. Previous payments under the Item will be deducted from this amount.

E. When 10% of the adjusted Contract amount for construction Items is earned, 90% of the mobilization lump sum bid or 10% of the total Contract amount, whichever is less, will be paid. Previous payments under this Item will be deducted from this amount.

F. Payment for the remainder of the lump sum bid for "Mobilization" will be made on the next estimate cycle after the initial retainage estimate or at final acceptance for projects without retainage.

SPECIAL SPECIFICATIONS

FLEXIBLE MEMBRANE LINER

1. City of Pecos will provide the liner and geotextile material, which was purchased during a previous project and not installed.

2. The following Specification Section is included for information, but only the execution section will apply.

FLEXIBLE MEMBRANE LINER

PART 1 - GENERAL

1.1 RELATED DOCUMENTS

A. Drawings, Standard General Conditions of the Construction Contract Funding Agency Edition, Supplemental Contract Conditions, and Division 1 – General Requirements apply to Work of this Section.

1.2 SECTION INCLUDES

A. The section includes the aeration and effluent storage pond liner. The installation includes subgrade preparation, liner submittals, and installation of a 40-mil secondary liner, 10-ounce geotextile material, 4-inch leak detection piping, gravel fill, 60-mil primary liner, miscellaneous concrete, fasteners, testing and pipe penetration boots, as shown in these specifications and on the plans.

B. High Density Polyethylene (HDPE) flexible membrane liner (FML).

C. Installation of HDPE FML.

1.3 RELATED SECTIONS

A. Section 02200 – Earthwork

1.4 REFERENCES

A. Applicable Publication: The publications listed below form a part of this specification to the extent referenced. The publications are referred to in the text by the basic designation only. The latest publication in use at the time of the executed contract will be the one that governs this project.

B. AMERICAN SOCIETY FOR TESTING AND MATERIALS (ASTM) STANDARDS

1.	D 413	Rubber Property-Adhesion to Flexible Substrate
2.	D 638	Tensile Properties of Plastics
3.	D 746	Brittleness Temperature of Plastics and Elastomers by Impact
4.	D 1004	Initial Tear Resistance of Plastic Film and Sheeting
5.	D 1204	Linear Dimensional Changes of Nonrigid Thermoplastic Sheeting or Film at Elevated Temperature
6.	D 1238	Flow Rates of Thermoplastic by Extrusion Plastometer
7.	D 1505	Standard Test Method for Density of Plastics by the Density-Gradient Technique
8.	D 1593	Nonrigid Vinyl Chloride Plastic Sheeting
9.	D 1603	Carbon Black in Olefin Plastics
10.	D 1693	Environmental Stress Cracking of Ethylene Plastics
11.	D 5199	Standard Test Method for Measuring Nominal Thickness of Geotextile and Geomembranes

1.5 QUALITY ASSURANCE

A. Manufacturing

1. As of January 1, 1998, the National Sanitation Foundation (NSF) no longer lists geomembrane manufacturers nor supports any geomembrane regulations. The current industry standard for HDPE geomembrane (smooth & textured) is GRI Test Method GM13, rev. 7 – February 20, 2006. The current industry standard for LLDPE geomembrane (smooth & textured) is GRI Test Method GM 17, rev. 7 – February 20, 2006.

B. Installation

1. The installation contractor shall be the manufacturer or an approved contractor trained and licensed to install the manufacturer's geomembrane.
   Installation shall be performed under the constant direction of a single Field Installation Supervisor who shall remain on site and be responsible, throughout the liner installation, for liner layout, seaming, patching, testing, repairs, and all other activities by the Installer. This Installation Supervisor shall have installed or supervised the installation and seaming of a minimum of 2,000,000 square feet of HDPE geomembrane. Actual seaming shall be performed under the direction of a Master Seamer (who may also be the Installation Supervisor) who has seamed a minimum of 2,000,000 square feet of HDPE geomembrane, using the same type of seaming apparatus specified in the current project. This Installation Supervisor and/or Master Seamer shall be present whenever seaming is performed.

1.6 SUBMITTALS

A. Manufacturer

1. Quality control program and manual, or descriptive documentation.
2. List of material properties and samples of liner.
3. A list documenting no less than 5 completed facilities totaling a minimum of 2,000,000 square feet.
4. Certification that all resin used in the manufacture of geomembrane for this job meets the specifications.
5. Copy of quality control certificates issued by the HDPE resin supplier.
6. Copy of quality control certificates in conformance with Sections 2.2 and 2.5.
7. Certification that the geomembrane and extrudate produced for this project have the same properties.

B. Installation Contractor

1. Certification that both the Installation Supervisor for the installer and the Master Seamer have reviewed the Quality Assurance Plan, the Project Plans, and these specifications.
2. Three (3) samples of factory seams, if applicable. In addition, the Contractor shall submit three field seam samples. The Contractor shall also provide a list of seam properties, minimum values (see section 2.4), and test methods employed.
3. A list of at least 5 completed facilities, totaling a minimum of 2,000,000 square feet for which the Contractor has installed an HDPE geomembrane.
4. Proposed Installation Panel layout identifying seams and details.
   a. Layout plan must be approved by the Engineer at least 10 days before materials are ordered. The panel layout must provide a numbering scheme to be used in quality control/assurance procedures and shall provide that:
      1) Seams run up and down slopes.
      2) Field seam lengths are to be minimized.

3) FML shall not have any penetrations.

5. Any proposed variance or deviation from these documents shall be submitted in writing by the Installer to the Engineer a minimum of seven (7) working days prior to the scheduled start of geomembrane installation and will be accepted/rejected by the Engineer prior to start of installation activities.
6. Certification that the subgrade in each area to be lined is suitable for placement of the liner.

1.7 WARRANTY

A. A written Warranty shall be obtained from the Manufacturer (for material) and the Installation Contractor (for workmanship). These documents shall warrant the quality of the in-place liner.
   1. Manufacturer
      a. Furnish a written warranty on a prorate basis for a period of 20 years. The warranty shall be against manufacturing defects or workmanship and against deterioration due to ozone, ultraviolet or other normal weather aging. The warranty shall be limited to replacement of material only, and shall not cover installation.
   2. Installation Contractor
      a. Furnish a written warranty that the entire lining installed to be free of defects in material and workmanship and installed pursuant to the Town of Pecos City, Texas - WWTP "Soil and Liner Quality Control Plan" (SLQCP) for a period of 2 years following the date of the Certificate of Completion. The Contractor shall agree to make any repairs or replacements made necessary by defects in materials or workmanship which become evident during the 2 year warranty period.

1.8 DELIVERY, STORAGE AND HANDLING

A. Transportation
   1. The geomembrane rolls or panels shall be packaged and shipped by appropriate means so that no damage is caused. Transportation shall be the responsibility of the Installer.

B. Delivery
   1. Off-loading and storage of the geomembrane is the responsibility of the Installer. The Installer shall be responsible for replacing any damaged or unacceptable material at no cost to the Owner. No off-loading shall be done unless the Engineer is present. Damage during off-loading shall be documented by the Engineer and Installer. All damaged rolls must be separated from the undamaged rolls until the proper disposition of that material has been determined by the Engineer. Engineer will be the final authority on determination of damage.

C. On-Site Storage
   1. The geomembrane shall be stored so as to be protected from puncture, dirt, grease, water, moisture, mud, mechanical abrasions, excessive heat, or other damage.
   2. The rolls shall be stored on a prepared surface (not wooden pallets) and should not be stacked more than two rolls high.

PART 2 - PRODUCTS

2.1 MATERIALS

A. The geomembrane shall be High-Density Polyethylene.
B. Gasket material shall be neoprene, closed cell medium, 3 inch thick, 50 foot lengths with adhesive on one side, or other compatible gasket materials as required.
C. Metal battens or straps and hardware shall be stainless steel.
D. Water cut-off mastic shall be a Neoprene Flashing Cement as supplied by the manufacturer or as required.
E. Sealant shall be General Electric Silicone, RTV 103 or approved equivalent.

2.2 GEOMEMBRANE RAW MATERIALS

The geomembrane shall be manufactured of new, first-quality resin and shall be compounded and manufactured specifically for the intended purpose. Carbon black shall be added to the resin if the resin is not compounded for ultra-violet resistance. The resin manufacturer shall certify each batch for the following properties.

The High Density Polyethylene (Compounded) resin shall meet the following specifications:

Property	Test Method	Requirements
Specific Gravity	(ASTM D 792 or ASTM D 1505)	0.94 g/cc
Melt Index	(ASTM D 1238 Condition E)	<0.1 g/10 min.
Carbon Black Content	(ASTM D 1603)	2% to 3%

2.3 ROLLS

A. The geomembrane shall be supplied in rolls with a minimum width of 15 feet. Labels on each roll shall identify the thickness of the material, the length and width of the roll, batch and roll numbers, and name of manufacturer. The roll length shall be maximized to provide the largest manageable sheet for the fewest field seams
B. The geomembrane rolls shall meet the properties shown on Table 1 for smooth membrane material.
C. Prior to use, the material shall be certified in writing by the manufacturer to meet the minimum physical properties shown on Table 1. The certificate must include roll identification number, testing procedure and test results. Test results are required for every 50,000 square feet of material shipped to site.

TABLE 1
TYPICAL PROPERTIES: 60 mil, Smooth Liner

Property	Test Method	Test Results
Thickness (mils), minimum	ASTM D 1593	60±10%
Density (g/cc), minimum	ASTM D 10792	0.94
Melt Index (g/10 min., maxmum)	ASTM D 1238	1.0
Carbon Black Content, (%)	ASTM D 1603	2-3
Carbon Black Dispersion	ASTM D 4833	A-1, A-2, B-1
Tensile Properties:	ASTM D 638	
1) Tensile Strength at Yield (pounds/inch width)	Type IV specimen At 2 inches/minute	126
2) Tensile Strength at Break (pounds/inch width)		228
3) Elongation at Yield (%)		13
4) Elongation at Break (%)		700
4) Modulus of Elasticity (1% secant; pounds/square inch)		80,000
Tear Strength (lbs.)	ASTM D 1004 Die C	45
Puncture Resistance (lbs.)	*ASTM D 4833	108
Hydrostatic Resistance (lbs./square inch)	ASTM D 751	480
(% change max.)	212EF, 15 min.	
(% change max. in orig. value)	Type IV specimen	
A. Tensile Strength at Yield & Break	At 2 inches/minute	10
B. Elongation at Yield & Break		10
7 days, 100 pphm, 104EF, bent loop Environmental Stress Crack (hours) Condition B+	ASTM D 5397 (modified NSF 54)	>300
Coefficient of Linear Thermal Expansion (cm/cm °C) x 10^{-4}	ASTM D 696	2.0
Moisture Vapor Transmission Rate (g/100 per day)	ASTM E 96 100 EF, 100% Relative humidity	0.02

* All values, except when specified as minimum or maximum, represent average lot property values

** Federal Test Method Standards

TABLE 2
TYPICAL PROPERTIES: 40 mil, Smooth Liner

Property	Test Method	Test Results
Thickness (mils), minimum	ASTM D 1593	40±10%
Density (g/cc), minimum	ASTM D 10792	0.94
Melt Index (g/10 min., maximum)	ASTM D 1238	1.0
Carbon Black Content, (%)	ASTM D 1603	2-3
Carbon Black Dispersion	ASTM D 4833	A-1, A-2, B-1
Tensile Properties:	ASTM D 638	
1) Tensile Strength at Yield (pounds/inch width)	Type IV specimen At 2 inches/minute	84
2) Tensile Strength at Break (pounds/inch width)		152
3) Elongation at Yield (%)		13
4) Elongation at Break (%)		700
4) Modulus of Elasticity (1% secant; pounds/square inch)		80,000
Tear Strength (lbs.)	ASTM D 1004 Die C	28
Puncture Resistance (lbs.)	*ASTM D 4833	72
Hydrostatic Resistance (lbs./square inch)	ASTM D 751	480
(% change max.)	212EF, 15 min.	
(% change max. in orig. value)	Type IV specimen	
A. Tensile Strength at Yield & Break	At 2 inches/minute	10
B. Elongation at Yield & Break		10
7 days, 100 pphm, 104EF, bent loop		
Environmental Stress Crack (hours) Condition B+	ASTM D 5397	>300
	(modified NSF 54)	
Coefficient of Linear Thermal Expansion (cm/cm °C) x 10^{-4}	ASTM D 696	2.0
Moisture Vapor Transmission Rate (g/100 per day)	ASTM E 96 100 EF, 100% Relative humidity	0.02

* All values, except when specified as minimum or maximum, represent average lot property values

** Federal Test Method Standards

TABLE 3
TYPICAL PROPERTIES: 10 OZ Geotextile Fabric

Property	Test Method	Test Results
Tensile Strength	ASTM D-4632	270 lbs
Elongation @ Break	ASTM D-4632	50 %
Mullen Burst	ASTM D-3786	520 psi
Puncture Strength	ASTM D-4833	160 lbs
Trapezoidal Tear	ASTM D-4533	100 lbs
Apparent Opening Size	ASTM D-4751	100 US Sieve
Permittivity	ASTM D-4491	1.2 Sec-1
UV Resistance, % Retained	ASTM D-4355	70 %
Flow Rate	ASTM D-4491	80 gal/min/sf

2.4 FIELD SEAMS

Seam Property	Test Method	Requirements
Shear Strength	ASTM D 4437 (as modified in App. A Of NSF 54*)	95% of manufacturer's parent Sheet strength and >129ppi for 60 mil liner >81ppi for 40 mil liner.
Peel Strength	ASTM D 4437 (as modified in App. A Of NSF 54*)	62% of manufacturer's parent Sheet strength and >78ppi for 60 mil liner >52ppi for 40 mil liner Film Tear Bond**

* National Sanitation Foundation, Standard 54; "Flexible Membrane Liners."
** Film Tear Bond (FTB) is defined as failure of one of the sheets by tearing, instead of separating from the other sheet at the weld interface area (sheet fails before weld).

1. Shear seam specimens are 1 inch wide, with a grip separation of 4 inches plus the width of the seam. The seam is to be centered between the clamps. The grip separation rate is 2 ipm.
2. Both shear seam strength and peel tests shall be run on five replicate specimens. A break through the weld or at the weld-sheet interface shall be considered a Non-FTB (failure) in both seam strength (shear) and peel strength tests.
3. Approved field seaming processes are hot shoe fusion welding and extrusion welding.
4. Welding rods or beads used for extrusion welding shall be HDPE and the physical properties shall be the same as those of the resin used in the manufacture of the HDPE geomembrane.

2.5 QUALITY CONTROL SPECIFICATIONS

A. Raw Materials
   1. Resin
      a. All resins for use in Geomembrane must pass a candidate pre-approval process before being eligible for use. Each incoming rail car shall be sampled by compartment with the following testing performed and compared to the manufacturer's specifications:

1) CDensity: ASTM D 1505.
2) CMelt Index: ASTM D 1238.

2. Additives
   a. All additives and concentrates must pass a candidate pre-approval process. All incoming materials are to be statistically sampled with the following testing performed and compared to the manufacturer's specifications:
      1) Density: ASTM D 1505.
      2) Melt Index: ASTM D 1238.
      3) Carbon Black Content: ASTM D 1603.

B. Finished Product: On-Line During Production
   1. Coverage
      a. A minimum of one person from the Quality Department, independent of the Production Department, shall be present for on-line inspection of every roll for 100% of every run.
   2. Inspection
      a. Performed on each roll.
         1) Thickness
            (a) A full width sample shall be cut from the end of each roll, and thickness shall be checked across the entire sample.
         2) Appearance
            (a) Constant monitoring of:
               (1) Sheet surface appearance.
               (2) Knife-cut edge.
               (3) Folds, holes, creases, abrasions, or other damage.
   3. Roll Identification
      a. The Q.C. Engineer controls all paperwork, including roll tags. Four tags per roll shall be used on the following:
         1) On the roll sleeve.
         2) Inside the core.
         3) On the production roll sample.
         4) On the roll surface.
   4. Out-of-Spec. Material
      a. Any roll not meeting the specification for any of the above inspections shall be placed on hold.

PART 3 - EXECUTION

3.1 ANCHOR TRENCH

The anchor trench shall be excavated as specified prior to liner system placement.

3.2 PLACEMENT

A. The Installer shall be responsible for the following:
   1. Geotechnical approval of the soil preparation.
   2. No equipment or tools shall damage the geomembrane by handling, trafficking, or other means.
   3. No personnel working on the geomembrane shall smoke, wear damaging shoes, or engage in other activities that could damage the geomembrane.

4. The method used to unroll the panels shall not cause scratches or crimps in the geomembrane and shall not cause indentations in the supporting soil greater than one inch deep or damage to the underlying geotextile.
5. The method used to place the panels shall minimize wrinkles. Wrinkles shall be identified as to proper location and compensation shall be identified on the Contractor's and Engineer's drawings. Ballast shall be used to prevent relocation of the compensating wrinkles by wind.
6. Adequate loading (e.g., sand bags or similar items that will not damage the geomembrane) shall be placed to prevent uplift by wind (in case of high winds, continuous loading is recommended along edges of panels to minimize risk of wind flow under the panels).
7. Direct contact with the geomembrane shall be minimized, i.e., the geomembrane in traffic areas is protected by geo-textiles, extra geomembrane, or other suitable materials.

B. Weather Limitations
1. Geomembrane deployment shall proceed between ambient temperatures of 32° F to 104 F. Placement can proceed below 32EF only after it has been verified by the Engineer that the material can be seamed according to the specification. Below 40° F, preheat of the FML will be required.
2. Geomembrane placement shall not be done during any precipitation, in the presence of excessive moisture (e.g., fog, rain, dew, frost) or in the presence of excessive winds, as determined by the installation supervisor.

C. Factory Seam Quality Verifications
1. The Engineer will require the Contractor to test up to as much as 20% of factory fusion welds (non-destructive air pressure test and/or vacuum test) in the field to verify factory test results. Additional testing at the Installer's expense will be required if failed tests are obtained in the field.

3.3 FIELD SEAMING

A. Seams shall be oriented parallel to the line of maximum slope, i.e., oriented down, not across the slope. In corners and odd-shaped geometric locations, the number of field seams shall be minimized.

B. No base T-seam shall be closer than 5 feet from the toe of the slope. Seams shall be aligned with the least possible number of wrinkles and "fishmouths." If a fishmouth or wrinkle is found, it shall be relieved and cap-stripped.

C. Seam Overlap
1. Panels of geomembrane must have a finished overlap of a minimum of 4 inches for hot shoe fusion welding and 3 inches for extrusion welding, but in any event sufficient overlap shall be provided to allow peel tests to be performed on the seam.
2. No solvent or adhesive may be used unless the product is approved by the Engineer. (Samples shall be submitted to the Design Engineer for testing and evaluation).
3. The procedure used to temporarily bond adjacent panels together shall not damage the geomembrane; in particular, the temperature of hot air at the nozzle of any spot welding apparatus shall be controlled such that the geomembrane is not damaged.

D. Seaming Equipment and Accessories
1. Approved equipment for field seaming are hot shoe fusion welders and extrusion welders.
   a. Hot Shoe Welder, 110 Volt, 10 Amps.
   b. Extrusion Welder, 220 Volt, 19 Amps.
   c. High-speed, 10,000 rpm, 42 inch side grinder with 80-grit discs.

d. 7.5 KW Generator, single-phase with 110/220 Volt Outputs.

e. Power Cord, minimum S.O. type, 10 O.S.H.A. approved electrical cord with O.S.H.A. approved twist-type plugs and connections.

f. Seam Vacuum Tester for non-destructive seam and patch testing.

g. Field Tensiometer, capable of performing seam and peel adhesion tests for quantitative testing on-site.

E. Test Seams

1. Field test seams shall be conducted on geomembrane liner to verify that seaming conditions are satisfactory. Test seams shall be conducted for each seamer at the beginning of each seaming period, at the Engineer's discretion, and at least once each 4 hours, for each seaming apparatus used that day.

2. All test seams shall be made at a location selected by the Engineer in the area of the seaming and in contact with the subgrade. The test seam samples shall be 10 feet long for hot shoe welding and 3 feet long for extrusion welding with the seam centered lengthwise. Specimens 1 inch wide shall be cut from each opposite end of the test seam by the Engineer. The Engineer shall use a tensiometer provided by the Installer to test these specimens for shear and peel. If a test seam fails to meet field seam specifications, the seaming apparatus and/or seamer shall not be accepted and shall not be used for seaming until the deficiencies are corrected and two consecutive successful full test seams are achieved.

F. Non-Destructive Seam Testing

1. The Installer shall non-destructively test all field seams over their full length. All test equipment, including but not limited to the following shall be furnished by the Installer:

a. Vacuum Box Testing

1) Equipment for testing single wedge fusion seams and extrusion seams shall be comprised of the following:

(a) A vacuum box assembly consisting of a rigid housing, a transparent viewing window, a soft rubber gasket attached to the bottom, port hole or valve assembly, and a vacuum gauge.

(b) A steel vacuum tank and pump assembly equipped with a pressure controller and pipe connections.

(c) A rubber pressure/vacuum hose with fittings and connections.

(d) A plastic bucket and wide paint brush.

(e) A soapy solution.

2) The following procedures shall be followed by the installer:

(a) Excess sheet overlap shall be trimmed away.

(b) Clean the window, gasket surfaces and check for leaks.

(c) Energize the vacuum pump and reduce the tank pressure to approximately 3-5 psi.

(d) Wet a strip of geomembrane approximately 12 inches by 48 inches (length of box) with the soapy solution.

(e) Place the box over the wetted area and compress.

(f) Close the bleed valve and open the vacuum valve.

(g) Ensure that a leak tight seal is created.

(h) For a period of approximately 15 seconds, examine the geomembrane through the viewing window for the presence of soap bubbles.

(i) If no bubbles appear after 15 seconds, close the vacuum valve and open the bleed valve, move the box over the next adjoining area with a minimum 3 inches overlap and repeat the process.

(j) All areas where soap bubbles appear shall be marked and repaired and then retested.

3) The following procedures shall apply to locations where seams cannot be non-destructively tested, as determined by the Engineer:

(a) If the seam is accessible to testing equipment prior to final installation, the seam shall be non-destructively tested prior to final installation.

(b) If the seam cannot be tested prior to final installation, the seaming operations shall be observed by the Engineer for uniformity and completeness.

2. Air Pressure Testing (For Double Fusion Seam Only)

a. The following procedures are applicable to those processes which produce a double seam with an enclosed space.

1) Equipment for testing double fusion seams shall be comprised of the following:

(a) An air pump equipped with pressure gauge capable of generating and sustaining a pressure between 25 and 30 psi and mounted on a cushion to protect the geomembrane.

(b) A manometer equipped with a sharp hollow needle, or other approved pressure feed device.

b. The following procedures shall be followed by the Installer:

1) Seal one end of the seam to be tested.

2) Insert needle or other approved pressure feed device through the sealed end of the channel created by the double wedge fusion weld.

3) Energize the air pump to verify the unobstructed passage of air through the channel.

4) Seal the other end of the channel.

5) Energize the air pump to a pressure between 25 and 30 psi, close valve, and sustain pressure for approximately 5 minutes.

6) If loss of pressure exceeds 4 psi, or pressure does not stabilize, locate faulty area, repair and retest.

7) Remove needle or other approved pressure feed device and seal.

G. Destructive Seam Testing

1. The Installer shall provide the Engineer with a minimum of one destructive test sample per 1500 feet of seam length from a location specified by the Engineer. The Installer shall not be informed in advance of the sample location.

a. Sampling Procedure

1) In order to obtain test results prior to completion of liner installation, samples shall be cut by the Installer as the seaming progresses. A destructive test must be done for each welding machine used for seaming or repairs. Sampling times and locations shall be determined by the Engineer. The Engineer must witness the obtainment of all field test samples and the Installer shall mark all samples with their location roll and seam number. The Installer shall also record in written form the date, time, location, roll seam number, ambient temperatures, and pass or fail description. A copy of the information must be attached to each sample portion. All holes in the geomembrane resulting from obtaining the seam samples shall be immediately repaired. All patches shall be vacuum tested.

b. Size and Disposition of Samples

1) The samples shall be 12 inches wide by 36 inches long with the seam centered lengthwise. The sample shall be cut into two equal length pieces, and given to the Engineer.

c. Field Testing

1) The Installer shall cut six 1-inch wide replicate specimens from his sample and these shall be tested by the Engineer. The Installer shall test two specimens (four when possible for testing both tracks on dual-track fusion welded seams) for peel strength. All tests to be witnessed by the Engineer. To be acceptable, both test specimens must pass. Any specimen that fails through the weld or by adhesion at the weldsheet interface is a Non-FTB break and shall be considered a failure.

d. Independent Laboratory Testing

1) The Engineer will package and ship all destructive seam samples to an independent testing Laboratory for determination and verification of all field shear and peel strengths. The test method and procedures to be used by the Independent Laboratory shall be the same used in field testing, where seam samples are 1 inch wide, and the grip separation rate is 2 ipm. The minimum passing criteria for independent laboratory testing are all three of the following:

(a) All seam samples tested in the peel mode must fail in FTB.

(b) At least four of five seam samples from each peel and shear determination must meet the minimum specified value.

(c) The average value from all five seam samples from each peel and shear determination must meet the minimum specified value.

The above criteria apply to both tracks from each dual-track fusion welded seam before it is considered as passing. ALL FAILED LAB TESTS WILL BE PAID FOR BY THE INSTALLER.

e. Archive Samples

1) The Installer will package and ship the remaining samples to the Engineer for archival. The samples shall include information that indicates where the sample was taken.

f. Procedures for Destructive Test Failure

1) The following procedures shall apply whenever a sample fails the field destructive test.

(a) The installer shall cap strip the seam between the failed location and any passed test location.

(b) The installer can retrace the welding path to an intermediate location (at a minimum of 10 feet from the location of the failed test), at the Engineer's discretion, and take a small sample for an additional field test. If this test passes, then the seam shall be cap stripped between that location and the original failed location. If the test fails, then the process is repeated.

(c) Over the length of seam failure, the Contractor shall either cut out the old seam, reposition the panel and re-seam, or add a cap strip, as required by the Engineer.

(d) After reseaming or placement of the cap strip, additional destructive field test(s) shall be taken within the re-seamed area. The reseamed sample shall be found acceptable if test results are approved by the Engineer. If test results are not acceptable, this process shall be

repeated until the re-seamed length is judged satisfactory by the Engineer.

In the event that a sample fails a laboratory destructive test, then the above procedures shall be followed, considering laboratory tests exclusively.

The Engineer will document all actions taken in conjunction with destructive test failures.

H. Defects and Repairs

1. All seams and non-seam areas of the geomembrane shall be inspected by the Engineer for defects, holes, blisters, un-dispersed raw materials, and any sign of contamination by foreign matter. Because light reflected by the geomembrane helps to detect defects, the surface of the geomembrane shall be clean at the time of inspection. The geomembrane surface shall be brushed, blown, or washed by the Installer if the amount of dust or mud inhibits inspection. The Engineer shall decide if cleaning of the geomembrane is needed to facilitate inspection.

   a. Evaluation

      1) Each suspect location in seam and non-seam areas shall be non-destructively tested as appropriate in the presence of the Engineer. Each location that fails the non-destructive testing shall be marked by the Engineer, and repaired accordingly.

   b. Repair Procedures

      1) Defective seams shall be restarted/reseamed as described in these specifications.
      2) Small holes shall be repaired by extrusion cap welding. If the hole is larger than 3 inch, it shall be patched.
      3) Tears shall be repaired by patching. Where the tear is on a slope or an area of stress and has a sharp end it must be rounded prior to patching.
      4) Blisters, large holes, undispersed raw materials, and contamination by foreign matter shall be repaired by patches.
      5) Surfaces of HDPE which are to be patched shall be abraded and cleaned no more than 15 minutes prior to the repair. No more than 10% of the thickness shall be removed.

      Patches shall be round or oval in shape, made of the same geomembrane, and extend a minimum of 6 inches beyond the edge of defects. All patches shall be of the same compound and thickness as the geomembrane specified. All patches shall have their top edge beveled with an angle grinder prior to placement on the geomembrane. Patches shall be applied using approved methods only.

   c. Restart/Reseaming Procedures

      1) The welding process shall restart by grinding the existing seam and re-welding a new seam. Welding shall commence where the grinding started and must overlap the previous seam by at least 2 inches. Reseaming over an existing seam without regrinding shall not be permitted.

   d. Verification of Repairs

      1) Each repair shall be non-destructively tested, except when the Engineer requires a destructive seam sample obtained from a repaired seam. Repairs that pass the non-destructive test shall be taken as an indication of an adequate repair. Failed tests indicate that the repair shall be repeated and retested until passing test results are achieved.

Recording of Results: daily documentation of all non-destructive and destructive testing shall be provided to the Engineer by the Installer. This documentation shall identify all seams that initially failed the test and include evidence that these seams were repaired and successfully retested.

3.4 GEOMEMBRANE ACCEPTANCE

A. The Installer shall retain all ownership and responsibility for the geomembrane until acceptance by the Owner. The surface of the geomembrane shall not have striations, roughness, pinholes, or bubbles and shall be free of holes, blisters, un-dispersed raw materials, or any contamination by foreign matter; except that if in the opinion of the Engineer the blemish will not adversely affect properties and use of the geomembrane, the Engineer may accept the geomembrane after sufficient laboratory test data are provided to support such acceptance, and further, provided all such testing is done at the sole expense of the Installer.

B. The geomembrane liner shall be accepted by the Owner when all of the following conditions are met:
   1. Installation is finished.
   2. Verification of the adequacy of all field seams and repairs, including associated testing, is complete.
   3. Written certification, including "as built" drawing(s), is provided by the Installer to the Engineer.
   4. Documentation of completed installation, including all reports is complete.

3.5 PAYMENT

A. Payment will be made for all work covered in this section at the contract unit price per unit as shown in the proposal. Such payment shall be complete compensation for the complete performance of the work in accordance with the drawings and the provisions of these specifications.

END OF SECTION

STAINLESS STEEL SLIDE GATE

GENERAL

The gates shall be either self-contained with yoke and bench stand operators, or non self-contained with separate stem guides and operator, in accordance with the requirements of these specifications. Specific configurations shall be as noted on the gate schedule or as shown on the plans.

FRAME AND GUIDES

The gate frame shall be a rigid unit composed of stainless steel guide rails with UHMW-PE (Ultra High Molecular Weight Poly Ethylene) seats upstream and downstream. These shall form a tight seal between the frame and the slide (disc). This tight seal shall provide an allowable leakage rate of no more than 1.24 liter per minute per peripheral meter for seating head (0.1 GPM per peripheral foot) and 2.48 liter per minute per peripheral meter for unseating heads (0.2 GPM per peripheral foot) under heads less than or equal to 6 meters in either directions. Stainless steel retainer bars, cross bars and head rails (for self-contained gate only) shall be provided. The clear opening shall be the same size as the waterway, unless otherwise specified. The guides shall be of sufficient length to support two-thirds of the height of the slide when in the full open position.

SLIDE COVER (DISC)

The slide cover (disc) shall be stainless steel plate reinforced with structural shapes welded to the plate. The slide cover shall not deflect more than 1/720th of the span of the gate under the maximum head. The stem connection shall be either the clevis type, with structural members welded to the slide and a bolt to act as a pivot pin, or a threaded and bolted (or keyed) thrust nut supported in a welded nut pocket. The clevis or pocket and yoke of the gate shall be capable of taking, without damage, at least twice the rated thrust output of the operator at 18 Kg (40 lbs) pull.

FLUSHBOTTOM CLOSURE

Gate frame shall be furnished with a flushbottom seal arrangement. A resilient seal with a minimum width of exposed face of 20mm (3/4") shall be securely attached to the frame.

YOKE

The yoke shall be either welded or bolted to the frame extensions. The slide shall be removable through the yoke opening or by disassembly/removal of the yoke. Yoke shall be designed to limit the deflection to 1/360th of the gate width.

STEMS

Stems shall be made of stainless steel. Diameter of the stem shall be sufficient to withstand a minimum of twice the rated output of the lift when subjected to 18 Kg (40 lbs) pull on the handwheel or crank. Where an electric actuator is used, stems shall withstand 1.25 times the stalled motor thrust.

Stem threads shall be of the stub Acme type.

STEM GUIDES

Stem guides shall be provided to support the stem such that the L/r ratio does not exceed 200. The stem guides shall have bronze or UHMW-PE bushing. Stem guides shall be made of stainless steel as noted on the gate schedule or as shown in plans.

STEM COVER
For rising stem type gates, a clear plastic stem cover shall be provided to give means of indication of gate position whenever required, allow inspection of the threads and to protect the stem from contamination. To avoid condensation of vapor on the threads, sufficient number of vent holes shall be present.

A Mylar tape type position indicator; metric or imperial graduated; shall be provided.

MANUAL LIFT
Gate manual lift shall be either handwheel or geared crank type. Under full operating head, the lift shall be able to operate the gate with a maximum pull of 18 kg (40 lbs) on the handwheel or crank.

Handwheel or crank shall be located at approximately 900mm above ground level. All geared lifts shall have cast iron housing and steel pedestals. Lifts shall be grease lubricated. Two stem limit nuts shall be provided to limit the gate stroke in the opening or closing directions. Lubrication fittings shall be provided for lubrication of the bearings without disassembly of the lift housing. Suitable seals shall be provided to prevent entry of foreign matter.

ELECTRIC ACTUATOR
The electric actuator shall include the motor, operator unit gearing, limit switch gearing, limit switches, torque switches, controls as specified, declutch lever or knob, space heater, mechanical dial position indicator (optional), gear housings, and auxiliary handwheel as a self-contained unit.

The motor shall be specifically designed for slide gate service and shall be for high torque, totally enclosed, non-ventilated construction, with motor leads brought into the limit switch compartment. Motor insulation shall be Nema Class B with a maximum continuous temperature rating of 120° C (rise + ambient).

The motor shall be of sufficient size to open or close the gate against the maximum expected differential pressure when voltage to the motor terminals is 10% above or below minimal 380V-3Ph-50Hz voltage (other voltages are available on request). The motor duty rating shall be sufficient for one complete open to close to open (or reverse) cycle without exceeding its temperature rating. The motor shall be pre-lubricated and all bearings shall be of the anti-friction type.

Limit switches and associated gearing shall be an integral part of the actuator. Limit switch gearing shall be of the intermittent type, totally enclosed in its own gear case to prevent dirt and foreign matter from entering the gear train, grease-lubricated, and shall be made of bronze or stainless steel. Limit switches shall be of the adjustable type capable of being set to trip at any point of gate travel between fully open and fully closed, and not be subject to breakage or slippage due to over-travel. Each actuator shall have a minimum of two (four) rotor-switch assemblies and a minimum of eight (sixteen) heavy duty contacts.

Each actuator shall be equipped with a double torque switch which is responsive to loads encountered in either the opening or closing direction. Each side of the switch shall have a numbered dial and shall be adjustable. A calibration tag shall be mounted near each switch correlating dial setting with unit output torque.

The torque switch shall operate during the complete gate cycle without the use of auxiliary relays, linkages, latches, or other devices. The torque switch shall be wired to shut off the actuator motor in the event of excessive torque being generated in either direction of travel.

Emergency handwheel shall be provided for manual operation. The handwheel shall not rotate during motor operation nor shall a fused motor prevent manual operation. When in manual operating position, the unit will remain in this position until motor is energized at which time the gate operator will automatically return to electric operation and shall remain in motor position until handwheel operation is desired. This movement from motor operation to handwheel operation shall be accomplished by a positive declutching knob or lever which will disengage the motor and motor gearing mechanically but not electrically. Hand operation must be reasonably fast. It shall not be possible for the unit to be simultaneously in manual and motor operation. The direction of rotation to open gate shall be marked on the handwheel.

The control circuit shall have a red and green pilot light for visual indication of gate position. The red light will indicate that gate is in the closed position, while the green light will indicate that gate is in open position. Both lights on will indicate that gate is in an intermediate position. Three push-buttons, open-stop-close, will be furnished for gate operation. Starter, push-buttons, and lights are to be furnished (integral with) (remote from) the operator.

For remote or automatic operation a three position selector switch, H-O-A (Hand-Off-Auto) shall be provided.

Continuous remote gate position indication shall be provided by use of 1000 OHM potentiometer connected to MDPI gearing (optional).

MATERIALS

Frames, Rails, Cover Slides, Yokes
Stainless Steel - ASTM A-240/A-276, Type 304L or 316L, as specified

Fasteners and Anchor Bolts
Stainless Steel - ASTM F-593 and F-594, Type 304 or 316, as specified

Stems
Stainless Steel - ASTM A-276, Type 304 or 316, as specified

Seals and Flushbottom Seal
Neoprene Rubber - ASTM D-2000

Seats
Ultra High Molecular Weight Polyethylene (UHMW-PE) - ASTM D-4020

Finish
Mill finish on all stainless steel surfaces
Epoxy paint on all cast iron or steel surfaces

MISCELLANEOUS MECHANICAL EQUIPMENT

1. GENERAL: This section specifies the furnishing of miscellaneous mechanical items.

2. PRESSURE GAGE:

   a. General. Provide where shown, of suitable range for service.

   b. Type. Provide bourdon type liquid filled, nonpulsating, stainless steel case, 4 inches in diameter, white dial with black numbers, ¼ inch male NPT connection, and having an accuracy with 3 percent of scale range. Gage to have bronze bourdon tube, tip and socket. Provide Ashcroft Model 10-1008AL or Granger no. 2C450 or approved equal.

   c. Use. Where air compressors and receivers are for control air only, located inside, standard 2 inch instrument gages will be acceptable.

   d. Valves. Provide all pressure gages with bar stock valves.

3. WATER METER:

   a. Meters shall be ultrasonic type, as manufactured by Fuji Electric Systems (Time Delta C), or approved equal.

   b. Meter shall be provided with 4-20 ma signal capability for the SCADA system.

   c. Meter shall be installed with a minimum of five diameters of straight pipe upstream and three diameters downstream from the nearest fitting.

4. CHLORINATOR:

   a. General. This section includes furnishing and installing a complete automatic flow proportional chlorination system. The system will include all equipment and labor to meet the operational requirements of the automatic chlorination system, as shown on the plans.

   b. Operation. The system will deliver an amount of chlorine under vacuum that corresponds to the amount required for the effluent flow rate of up to 2.4 MDG. It will provide for manual and automatic feed rates. All equipment required to inject the chlorine under the line conditions present will be furnished. The associated safety devices for detecting and alarming the presence of chlorine gas will be furnished. The system will require interfacing with the system control panel. All of the above equipment will be installed in a prefabricated fiberglass building with the required air exhaust equipment, lightening and freeze protection.

c. Equipment. The system at a minimum will include all items shown on the plans, as manufactured by Global Treat, or approved equal.

1. The chlorine feed system will be connected to the auto control panel, so the system will be on when the effluent transmission line has effluent flowing through it. The meter panel rate will be set to feed the amount of chlorine for that water source's requirement. When the water source is turned off then the chlorine feed system will also be turned off.

2. Provide a rack and scale capable of weighing 4,000 LBS for each cylinder, as shown on the plans. Provide a cylinder restraining to prevent the bottles from tilting or being displaced from scale base. Any type of scales manufactured for household use is prohibited.

3. Provide a single point chlorine gas detector that will sense a minimum concentration of 0.5 ppm of chlorine gas. The detector will provide an audible warning and relay output that will indicate a chlorine leak. The chlorine sensor shall be an electrochemical type housed in ac corrosion resistant, Nema 4X Enclosure suitable for wall mounting. In the presence of chlorine a current flow will develop and be transmitted through electrical wiring to the receiver.

d. Safety Equipment. Provide 1 Each 10-Minute Self Contained Escape Pak. It will be provided with a full-face hood and 10-minute air bottle, two (2) self-contained shower and eyewash stations and two (2) windsocks. One eyewash station and one windsock to be installed on new chlorination building and the others on an existing chlorinator building.

e. Installation of Equipment. All gas and solution feed equipment will be mounted as directed by the Engineer in the fiberglass building. All electrical components will be mounted as directed by the Engineer in the fiberglass building. This is to prevent any chlorine leaks from damaging the electrical equipment. All wall penetrations and conduit will be sealed to prevent contamination by gas or water.

5. DE-CHLORINATOR:

a. General. This section includes furnishing and installing a complete automatic flow proportional de-chlorination system. The system will include all equipment and labor to meet the operational requirements of the automatic de-chlorination system, as shown on the plans.

b. Operation. The system will deliver an amount of S02 under vacuum that corresponds to the amount required for the effluent flow rate of up to 2.4MGD. It will provide for manual and automatic feed rates. All equipment required to inject the chlorine under the line conditions present will be furnished. The associated safety devices for

detecting and alarming the presence of S02 gas will be furnished. The system will require interfacing with the system control panel. All of the above equipment will be installed in a prefabricated fiberglass building with the required air exhaust equipment, lightening and freeze protection.

c. Equipment. The system at a minimum will include all items shown on the plans, as manufactured by Global Treat, or approved equal.

4. The chlorine feed system will be connected to the auto control panel, so the system will be on when the effluent transmission line has effluent flowing through it. The meter panel rate will be set to feed the amount of S02 for that water source's requirement. When the water source is turned off then the S02 feed system will also be turned off.

5. Provide a rack and scale capable of weighing 4,000 LBS for each cylinder, as shown on the plans. Provide a cylinder restraining to prevent the bottles from tilting or being displaced from scale base. Any type of scales manufactured for household use is prohibited.

6. Provide a single point S02 gas detector that will sense a minimum concentration of 1.0 ppm of S02 gas. The detector will provide an audible warning and relay output that will indicate a S02 leak. The S02 sensor shall be an electrochemical type housed in ac corrosion resistant, Nema 4X Enclosure suitable for wall mounting. In the presence of S02 a current flow will develop and be transmitted through electrical wiring to the receiver.

d. Safety Equipment. Provide 1 Each 10-Minute Self Contained Escape Pak. It will be provided with a full-face hood and 10-minute air bottle, one (1) eyewash station and one (1) windsock.

e. Installation of Equipment. All gas and solution feed equipment will be mounted as directed by the Engineer in the fiberglass building. All electrical components will be mounted as directed by the Engineer in the fiberglass building. This is to prevent any S02 leaks from damaging the electrical equipment. All wall penetrations and conduit will be sealed to prevent contamination by gas or water.

6. FIBERGLASS BUILDING: The building shall be of molded fiberglass construction, factor pre-assembled to make a bonded unit with no external seam or joint covers. The walls and roof shall be integral. There shall be a three inch wide external mounting flange around the entire lower perimeter. The building will be divided with one side used for chlorination system and the other side used for electrical / booster pumps equipment as shown on the plans. The building shall be divided as shown in the drawings.

The walls and roof shall be of sandwich construction consisting of 1/8th inch thick fiberglass skins and a one inch thick rigid isocyanturate foam core (R Value = 7.7). The doors shall be of fiberglass sandwich construction 1-1/4 inches thick.

The fiberglass laminate shall consist of polyester resin reinforced with a minimum of 25% by weight E-Glass. Both the exterior and interior of the Shelter shall be finished in a white polyester gel coat.

The building shall be furnished with the following standard equipment and accessories:

- One Ea exhaust fan with thermostat (550 cfm)
- One Ea Space Heater (one on each side)
- One Heating Thermostat
- One Ea screened ventilation louver
- One Ea Stainless Steel Key locked door knob
- One Ea Duplex Outlets w/ hinged covers
- One Ea Outside weatherproof switch for fan and light
- One Ea Interior vapor-resistant light
- One Ea Exterior High Pressure Sodium 70 Watt with Photo Cell Control
- One Ea Circuit Breaker Box
- One Ea Equipment Mounting Board
- One Ea 36" x 78" Door

The building shall be the length and width and height shown in the plans. It shall be mounted on a concrete slab suitable for supporting the weight of the building. The slab size shall be as shown on in the plans. The building shall be anchored as shown in the plans.

APPENDIX

Texas Commission on Environmental Quality
Organized Sewage Collection System
General Construction Notes

1. This Organized Sewage Collection System must be designed and constructed in accordance with the Texas Commission on Environmental Quality's (TCEQ) Edwards Aquifer Rules 30 Texas Administrative Code (TAC) §213.5(c), the Design Criteria for Sewerage Systems 30 TAC §317.1, 30 TAC §317.2, 30 TAC §317.3, and 30 TAC §317.13, and the City of N/A Standard Specifications.

2. All contractors conducting regulated activities associated with this proposed regulated project must be provided with copies of the Sewage Collection System plan and the TCEQ letter indicating the specific conditions of its approval. During the course of these regulated activities, the contractors must be required to keep on-site copies of the plan and the approval letter.

3. Prior to commencing any regulated activity, the applicant or his agent must notify the Austin Regional Office, in writing, of the date on which the regulated activity will begin.

4. Any modification to the activities described in the referenced SCS application following the date of approval may require the submittal of an SCS application to modify this approval, including the payment of appropriate fees and all information necessary for its review and approval.

5. The temporary erosion and sedimentation controls must be installed prior to initiating any other construction activity and maintained in accordance with the requirements of the construction plans. All temporary erosion and sedimentation controls must be removed when the construction area is stabilized.

6. The sewer line trench details showing the cross section with the dimensions, pipe placement, and backfill instructions are included on Plan Sheet 11 of 11 of these plans. All sewer pipes joints must meet the requirements in 30 TAC §317.2(a)(3).

   Gravity lines must be SDR 35 or less. Pressurized sewer systems must have pipe with a minimum working pressure rating of 150 psi.

   The ASTM, ANSI, or AWWA specification numbers for the pipe(s) and joints are

   The pipe material, the pressure classes, and the SDR and/or DR designations are

7. If any sensitive features are discovered during the wastewater line trenching activities, all regulated activities near the sensitive feature must be suspended immediately. The owner must notify the appropriate regional office of the Texas Commission on Environmental Quality in writing within two working days of the feature discovered. The applicant must submit a plan for ensuring the structural integrity of the sewer line or for modifying the proposed collection system alignment around the feature. The regulated activities near the sensitive feature may not proceed until the executive director has reviewed and approved the methods proposed to protect the sensitive feature and the Edwards Aquifer from any potentially adverse impacts to water quality while maintaining the structural integrity of the line.

8. Sewer lines located within or crossing the 5-year floodplain of a drainageway will be protected from inundation and stream velocities which could cause erosion and scouring of backfill. The trench must be capped with concrete to prevent scouring of backfill, or the sewer lines must be encased in concrete. All concrete shall have a minimum thickness of six (6) inches.

9. Blasting procedures for protection of existing sewer lines and other utilities will be in accordance with the National Fire Protection Association criteria. Sand is not allowed as bedding or backfill in trenches that have been blasted. If any existing sewer lines are damaged, the lines must be repaired and retested.

10. All manholes constructed or rehabilitated on this project must have watertight size on size resilient connectors allowing for differential settlement. If manholes are constructed within the 100-year floodplain, the cover must have a gasket and be bolted to the ring. Where gasketed manhole covers are required for more than three manholes in sequence or for more than 1500 feet, alternate means of venting will be provided. Bricks are not an acceptable construction material for any portion of the manhole.

    The diameter of the manholes must be a minimum of four feet and the manhole covers must have a minimum nominal diameter of two feet. These dimensions and other details showing compliance with the commission's rules concerning manholes and sewer line/manhole inverts described in 30 TAC 317.2(c)(5)(E) are included on Plan Sheet 11 of 11.

    It is suggested that entrance into manholes in excess of four feet deep be accomplished by means of a portable ladder. Where steps are used, they shall be made of a non-corrosive material and be in accordance with applicable OSHA specifications.

11. Where water lines and new sewer line are installed with a separation distance closer than nine feet (i.e., water lines crossing wastewater lines, water lines paralleling wastewater lines, or water lines next to manholes) the installation must meet the requirements of 30 TAC §317.13 (Design of Sewerage Systems) or 30 TAC §290.44(e) (Water Hygiene).

12. Where sewers lines deviate from straight alignment and uniform grade all curvature of sewer pipe must be achieved by the following procedure which is recommended by the pipe manufacturer: N/A.

    If pipe flexure is proposed, the following method of preventing deflection of the joint must be used: N/a.

    Specific care must be taken to ensure that the joint is placed in the center of the trench and properly bedded in accordance with 30 TAC §317.2(a)(5).

13. New sewage collection system lines must be constructed with "stub outs" for the connection of anticipated extensions. The location of such "stub outs" must be marked on the ground such that the location of such "stub outs" can be easily determined at the time of connection of the extensions. Such "stub outs" must be manufactured wyes or tees that are compatible in size and material with both the sewer line and the extension. At the time of original construction, new "stub-outs" must be constructed sufficiently to extend beyond the edge(s) of any street pavement under which they will pass to the property line. All "stub-outs" must be sealed with a manufactured cap to prevent leakage. Extensions that were not anticipated at the time of original construction or that are to be connected to an existing sewer line not furnished with "stub outs" must be connected

using a manufactured saddle and in accordance with accepted plumbing techniques.

If no stub-out is present an alternate method of joining laterals is shown in the detail on Plan Sheet 11 of 11. (For potential future laterals).

The private service lateral stub-outs must be installed as shown on the plan and profile sheets on Plan Sheet NA of NA and marked after backfilling as shown in the detail on Plan Sheet NA of NA.

14. Trenching, bedding and backfill must conform with 30 TAC §317.2(a)(5). The bedding and backfill for flexible pipe must comply with the standards of ASTM D-2321, Classes IA, IB, II or III. Rigid pipe bedding must comply with the requirements of ASTM C 12 (ANSI A 106.2) classes A, B or C.

15. Sewer lines must be tested from manhole to manhole. When a new sewer line is connected to an existing stub or clean-out, it must be tested from existing manhole to new manhole. If a stub or clean-out is used at the end of the proposed sewer line, no private service attachments may be connected between the last manhole and the cleanout unless it can be certified as conforming with the provisions of 30 TAC §213.5(c)(3)(E).

16. All sewer lines must be tested in accordance with 30 TAC §317.2(a)(4). The engineer must retain copies of all test results which must be made available to the executive director upon request. The engineer must certify in writing that all wastewater lines have passed all required testing to the appropriate regional office within 30 days of test completion and prior to use of the new collection system. Testing method will be:

(A) Infiltration or Exfiltration Tests. The total exfiltration as determined by a hydrostatic head test, must not exceed 50 gallons per inch diameter per mile of pipe per 24 hours at a minimum test head of two feet above the crown of the pipe at the upstream manhole. When pipes are installed below the groundwater level an infiltration test must be used in lieu of the exfiltration test. The total infiltration, as determined by a hydrostatic head test, must not exceed 50 gallons per inch diameter per mile of pipe per 24 hours at a minimum test head of two feet above the crown of the pipe at the upstream manhole, or at least two feet above existing groundwater level, whichever is greater. For construction within the 25 year flood plain, the infiltration or exfiltration must not exceed 10 gallons per inch diameter per mile of pipe per 24 hours at the same minimum test head. If the quantity of infiltration or exfiltration exceeds the maximum quantity specified, remedial action must be undertaken in order to reduce the infiltration or exfiltration to an amount within the limits specified.

(B) Low Pressure Air Test. The procedure for the low pressure air test must conform to the procedures described in ASTM C-828, ASTM C-924, ASTM F-1417 or other appropriate procedures, except for testing times. The test times must be as outlined in this section. For sections of pipe less than 36-inch average inside diameter, the following procedure must apply unless the pipe is to be joint tested. The pipe must be pressurized to 3.5 psi greater than the pressure exerted by groundwater above the pipe. Once the pressure is stabilized, the minimum time allowable for the pressure to drop from 3.5 pounds per square inch gauge to 2.5 pounds per square inch gauge must be computed from the following equation:

where:

$$T = \frac{0.085 \times D \times K}{Q}$$

T = time for pressure to drop 1.0 pound per square inch gauge in seconds
K = 0.000419 X D X L, but not less than 1.0
D = average inside pipe diameter in inches
L = length of line of same size being tested, in feet
Q = rate of loss, 0.0015 cubic feet per minute per square foot internal surface will be used.

Since a K value of less than 1.0 will not be used, there are minimum times for each pipe diameter as outlined below:

Pipe Diameter (inches)	Minimum Time (seconds)	Length for Minimum (feet)	Time for Longer Length (seconds)
6	340	398	0.855(L)
8	454	298	1.520(L)
10	567	239	2.374(L)
12	680	199	3.419(L)
15	850	159	5.342(L)
18	1020	133	7.693(L)
21	1190	114	10.471(L)
24	1360	100	13.676(L)
27	1530	88	17.309(L)
30	1700	80	21.369(L)
33	1870	72	25.856(L)

The test may be stopped if no pressure loss has occurred during the first 25% of the calculated testing time. If any pressure loss or leakage has occurred during the first 25% of the testing period, then the test must continue for the entire test duration as outlined above or until failure. Lines with a 27-inch average inside diameter and larger may be air tested at each joint. Pipe greater than 36 inch diameter must be tested for leakage at each joint. If the joint test is used, a visual inspection of the joint must be performed immediately after testing. The pipe is to be pressurized to 3.5 psi greater than the pressure exerted by groundwater above the pipe. Once the pressure has stabilized, the minimum time allowable for the pressure to drop from 3.5 pounds per square inch gauge to 2.5 pounds per square inch gauge must be 10 seconds.

(C) Deflection Testing. Deflection tests must be performed on all flexible pipes. For pipelines with inside diameters less than 27 inches, a rigid mandrel must be used to measure deflection. For pipelines with an inside diameter of 27 inches and greater, a method approved by the executive director must be used to test for vertical deflections. Other methods must provide a precision of ± two tenths of one percent (0.2 %) deflection. The test must be conducted after the final backfill has been in place at least 30 days. No pipe will exceed a deflection of five percent. If a pipe should fail to pass the deflection test, the problem must be corrected and a second test

must be conducted after the final backfill has been in place an additional 30 days. The tests must be performed without mechanical pulling devices. The design engineer should recognize that this is a maximum deflection criterion for all pipes and a deflection test less than five percent may be more appropriate for specific types and sizes of pipe. Upon completion of construction, the design engineer or other Texas Licensed Professional Engineer appointed by the owner must certify, to the Executive Director, that the entire installation has passed the deflection test. This certification may be made in conjunction with the notice of completion required in §317.1(e)(1) of this title (relating to General Provisions). This certification must be provided for the Commission to consider the requirements of the approval to have been met.

(i) The rigid mandrel shall have an outside diameter (O.D.) equal to 95% of the inside diameter (I.D.) of the pipe. The inside diameter of the pipe, for the purpose of determining the outside diameter of the mandrel, shall be the average outside diameter minus two minimum wall thicknesses for O.D. controlled pipe and the average inside diameter for I.D. controlled pipe, all dimensions shall be per appropriate standard. Statistical or other "tolerance packages" shall not be considered in mandrel sizing.

(ii) The rigid mandrel shall be constructed of a metal or a rigid plastic material that can withstand 200 psi without being deformed. The mandrel shall have nine or more "runners" or "legs" as long as the total number of legs is an odd number. The barrel section of the mandrel shall have a length of at least 75% of the inside diameter of the pipe. A proving ring shall be provided and used for each size mandrel in use.

(iii) Adjustable or flexible mandrels are prohibited. A television inspection is not a substitute for the deflection test. A deflectometer may be approved for use on a case by case basis. Mandrels with removable legs or runners may be accepted on a case by case basis.

17. All manholes must be tested to meet or exceed the requirements of 30 TAC §317.2(c)(5)(H).

18. All private service laterals must be inspected and certified in accordance with 30 TAC §213.5(c)(3)(I). After installation of and, prior to covering and connecting a private service lateral to an existing organized sewage collection system, a Texas Licensed Professional Engineer, Texas Registered Sanitarian, or appropriate city inspector must visually inspect the private service lateral and the connection to the sewage collection system, and certify that it is constructed in conformity with the applicable provisions of this section. The owner of the collection system must maintain such certifications for five years and forward copies to the appropriate regional office upon request. Connections may only be made to an approved sewage collection system.

THESE GENERAL CONSTRUCTION NOTES MUST BE INCLUDED ON THE CONSTRUCTION PLANS PROVIDED TO THE CONTRACTOR AND ALL SUBCONTRACTORS.

TCEQ WATER DISTRIBUTION SYSTEM
GENERAL CONSTRUCTION NOTES

1. This water distribution system must be constructed in accordance with the current Texas Commission on Environmental Quality (TCEQ) Rules and Regulations for Public Water Systems 30 Texas Administrative Code (TAC) Chapter 290 Subchapter D. When conflicts are noted with local standards, the more stringent requirement shall be applied. Construction for public water systems must always, at a minimum, meet TCEQ's "Rules and Regulations for Public Water Systems.

2. An appointed engineer shall notify in writing the local TCEQ's Regional Office when construction will start. Please keep in mind that upon completion of the water works project, the engineer or owner shall notify the commission's Water Supply Division, in writing, as to its completion and attest to the fact that the work has been completed essentially according to the plans and change orders on file with the commission as required in 30 TAC §290.39(h)(3).

3. All newly installed pipes and related products must conform to American National Standards Institute (ANSI)/NSF International Standard 61 and must be certified by an organization accredited by ANSI, as required by 30 TAC §290.44(a)(1).

4. Plastic pipe for use in public water systems must bear the NSF International Seal of Approval (NSF-pw) and have an ASTM design pressure rating of at least 150 psi or a standard dimension ratio of 26 or less, as required by 30 TAC §290.44(a)(2).

5. No pipe which has been used for any purpose other than the conveyance of drinking water shall be accepted or relocated for use in any public drinking water supply, as required by 30 TAC §290.44(a)(3).

6. Water transmission and distribution lines shall be installed in accordance with the manufacturer's instructions. However, the top of the water line must be located below the frost line and in no case shall the top of the water line be less than 24 inches below ground surface, as required by 30 TAC §290.44(a)(4).

7. Pursuant to 30 TAC §290.44(a)(5), the hydrostatic leakage rate shall not exceed the amount allowed or recommended by the most current AWWA formulas for PVC pipe, cast iron and ductile iron pipe. Include the formulas in the notes on the plans.

   - The hydrostatic leakage rate for polyvinyl chloride (PVC) pipe and appurtenances shall not exceed the amount allowed or recommended by formulas in America Water Works Association (AWWA) C-605 as required in 30 TAC §290.44(a)(5). Please ensure that the formula for this calculation is correct and most current formula is in use;

$$Q = \frac{LD\sqrt{P}}{148{,}000}$$

     Where:

     - Q = the quantity of makeup water in gallons per hour,
     - L = the length of the pipe section being tested, in feet,
     - D = the nominal diameter of the pipe in inches, and
     - P = the average test pressure during the hydrostatic test in pounds per square inch (psi).

   - The hydrostatic leakage rate for ductile iron (DI) pipe and appurtenances shall not exceed the amount allowed or recommended by formulas in America Water Works Association (AWWA) C-600 as required in 30 TAC §290.44(a)(5). Please ensure that the formula for this calculation is correct and most current formula is in use;

$$L = \frac{SD\sqrt{P}}{148{,}000}$$

     Where:

     - L = the quantity of makeup water in gallons per hour,
     - S = the length of the pipe section being tested, in feet,
     - D = the nominal diameter of the pipe in inches, and
     - P = the average test pressure during the hydrostatic test in pounds per square inch (psi).

8. The maximum allowable lead content of pipes, pipe fittings, plumbing fittings, and fixtures to 0.25 percent.

9. The system must be designed to maintain a minimum pressure of 35 psi at all points within the distribution network at flow rates of at least 1.5 gallons per minute per connection. When the system is intended to provide firefighting capability, it must also be designed to maintain a minimum pressure of 20 psi under combined fire and drinking water flow conditions as required by 30 TAC §290.44(d).

10. The contractor shall install appropriate air release devices in the distribution system at all points where topography or other factors may create air locks in the lines. All vent openings to the atmosphere shall be covered with 16-mesh or finer, corrosion resistant screening material or an acceptable equivalent as required by 30 TAC §290.44(d)(1).

11. Pursuant to 30 TAC §290.44(d)(4), accurate water meters shall be provided. Service connections and meter locations should be shown on the plans.

12. Pursuant to 30 TAC §290.44(d)(5), sufficient valves and blowoffs to make repairs. The engineering report shall establish criteria for this design.

13. Pursuant to 30 TAC §290.44(d)(6), the system shall be designed to afford effective circulation of water with a minimum of dead ends. All dead-end mains shall be provided with acceptable flush valves and discharge piping. All dead-end lines less than two inches in diameter will not require flush valves if they end at a customer service. Where dead ends are necessary as a stage in the growth of the system, they shall be located and arranged to ultimately connect the ends to provide circulation.

14. The contractor shall maintain a minimum separation distance in all directions of nine feet between the proposed waterline and wastewater collection facilities including manholes and septic tank drainfields. If this distance cannot be maintained, the contractor must immediately notify the project engineer for further direction. Separation distances, installation methods, and materials utilized must meet 30 TAC §290.44(e)(1-4) of the current rules.

15. Pursuant to 30 TAC §290.44(e)(5), the separation distance from a potable waterline to a wastewater main or lateral manhole or cleanout shall be a minimum of nine feet. Where the nine-foot separation distance cannot be achieved, the potable waterline shall be encased in a joint of at least 150 psi pressure class pipe at least 18 feet long and two nominal sizes larger than the new conveyance. The space around the carrier pipe shall be supported at five-foot intervals with spacers or be filled to the springline with washed sand. The encasement pipe shall be centered on the crossing and both ends sealed with cement grout or manufactured sealant.

16. Pursuant to 30 TAC §290.44(e)(6), fire hydrants shall not be installed within nine feet vertically or horizontally of any wastewater line, wastewater lateral, or wastewater service line regardless of construction.

17. Pursuant to 30 TAC §290.44(e)(7), suction mains to pumping equipment shall not cross wastewater mains, wastewater laterals, or wastewater service lines. Raw water supply lines shall not be installed within five feet of any tile or concrete wastewater main, wastewater lateral, or wastewater service line.

18. Pursuant to 30 TAC §290.44(e)(8), waterlines shall not be installed closer than ten feet to septic tank drainfields.

19. Pursuant to 30 TAC §290.44(f)(1), the contractor shall not place the pipe in water or where it can be flooded with water or sewage during its storage or installation.

20. Pursuant to 30 TAC §290.44(f)(2), when waterlines are laid under any flowing or intermittent stream or semi-permanent body of water the water main shall be installed in a separate watertight pipe encasement. Valves must be provided on each side of the crossing with facilities to allow the underwater portion of the system to be isolated and tested.

21. The contractor shall disinfect the new water mains in accordance with AWWA Standard C-651 and then flush and sample the lines before being placed into service. Samples shall be collected for microbiological analysis to check the effectiveness of the disinfection procedure which shall be repeated if contamination persists. A minimum of one sample for each 1,000 feet of completed water line will be required or at the next available sampling point beyond 1,000 feet as designated by the design engineer, in accordance with 30 TAC §290.44(f)(3).