# CONSTRUCTION PLANS
## FOR
# SCADA IMPROVEMENTS
## TOWN OF PECOS CITY, REEVES COUNTY, TEXAS
## JUNE, 2020

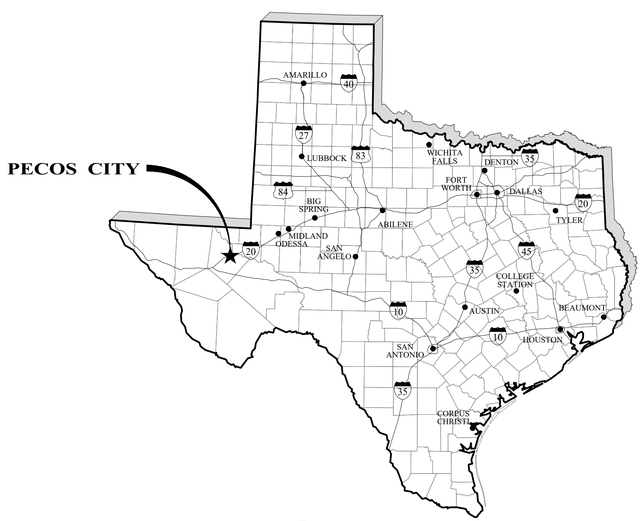


VICINITY MAP
NO SCALE

**MAYOR**
DAVID FLORES

**CITY COUNCIL**
GERALD TELLEZ
VALERIE TRUJILLO
VERONICA BACA
ARTHUR ORONA
CONRADO SALDANA

**CITY MANAGER**
SETH SORENSEN

**ASSISTANT CITY MANAGER**
HOWDY LISENBEE

06/26/2020

JORDAN S. HIBBS
115729
LICENSED
PROFESSIONAL ENGINEER
TEXAS

**JORDAN S. HIBBS, P.E.**

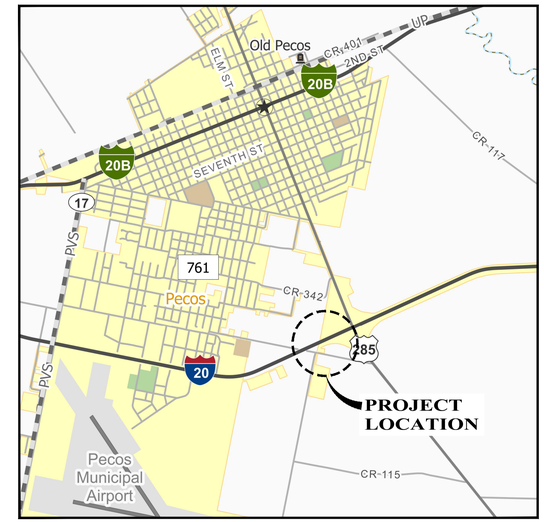


LOCATION MAP
SCALE: 1" = 3000'

| SHEET INDEX | | |
|---|---|---|
| 1 | G1 | COVER SHEET |
| 2 | C1 | BLENDING TANKS FLOW METER INSTALL |
| 3 | C2 | TWIN TOWERS FLOW METER INSTALL |
| 4 | C3 | WARD BOOSTER PUMP STATION FLOW METER INSTALL |
| 5 | C4 | CIVIL DETAILS |
| 6 | E1 | ELECTRICAL LEGENDS, ABBREVIATIONS, AND NOTES |
| 7 | E2 | OVERALL LOCATION SITE PLAN |
| 8 | E3 | OVERALL WIRELESS RADIO COMMUNICATION PLAN |
| 9 | E4 | NETWORK ARCHITECTURE DIAGRAM SHEET 1 |
| 10 | E5 | NETWORK ARCHITECTURE DIAGRAM SHEET 2 |
| 11 | E6 | CITY YARD SITE PLAN |
| 12 | E7 | CITY YARD OFFICE AND CHLORINE BUILDING PLANS |
| 13 | E8 | CITY YARD GROUND STORAGE TANKS PLAN |
| 14 | E9 | HIGH SERVICE PUMP STATION SITE PLAN |
| 15 | E10 | WARD BOOSTER PUMP STATION SITE PLAN |
| 16 | E11 | BLENDING TANKS SITE PLAN |
| 17 | E12 | WARD TANK SITE PLAN |
| 18 | E13 | STANDPIPES SITE PLAN |
| 19 | E14 | ELEVATED STORAGE TANKS TYPICAL SITE PLAN |
| 20 | E15 | REMOTE WELLS TYPICAL SITE PLAN |
| 21 | E16 | REMOTE WELL TYPICAL ONE-LINE DIAGRAM |
| 22 | E17 | HIGH SERVICE PUMP STATION CONTROL PANEL CONTROL DIAGRAMS SHEET 1 |
| 23 | E18 | HIGH SERVICE PUMP STATION CONTROL PANEL CONTROL DIAGRAMS SHEET 2 |
| 24 | E19 | HIGH SERVICE PUMP STATION CONTROL PANEL CONTROL DIAGRAMS SHEET 3 |
| 25 | E20 | TYPICAL SCADA PANEL CONTROL DIAGRAM |
| 26 | E21 | TYPICAL WELL CONTROL PANEL MODIFICATIONS CONTROL DIAGRAM |
| 27 | E22 | ELECTRICAL DETAILS SHEET 1 |
| 28 | E23 | ELECTRICAL DETAILS SHEET 2 |


ENPROTEC/HIBBS & TODD, INC.
ENVIRONMENTAL AND CIVIL ENGINEERING
402 Cedar Street
Abilene, Texas 79601
325-698-5560
PE Firm Registration No. 1151
PG Firm Registration No. 50103
RPLS Firm Registration No. 10007300


PROJECT NO.: 19-7469
SEQUENCE No. 1 OF 28
SHEET No. G1


ENPROTEC / HIBBS & TODD, INC.
ENVIRONMENTAL AND CIVIL ENGINEERING
ENPROTEC / HIBBS & TODD, INC.
ENVIRONMENTAL AND CIVIL ENGINEERING
ENPROTEC / HIBBS & TODD, INC.
ENVIRONMENTAL AND CIVIL ENGINEERING

**NOTES**

1. CONTRACTOR SHALL COORDINATE SHUTDOWNS WITH CITY.
2. NO DOWNSTREAM VALVES ARE PRESENT.
3. CONTRACTOR SHALL PLAN TO EVACUATE ANY WATER THAT COMES BACK WHEN CUTTING EXISTING PIPE.

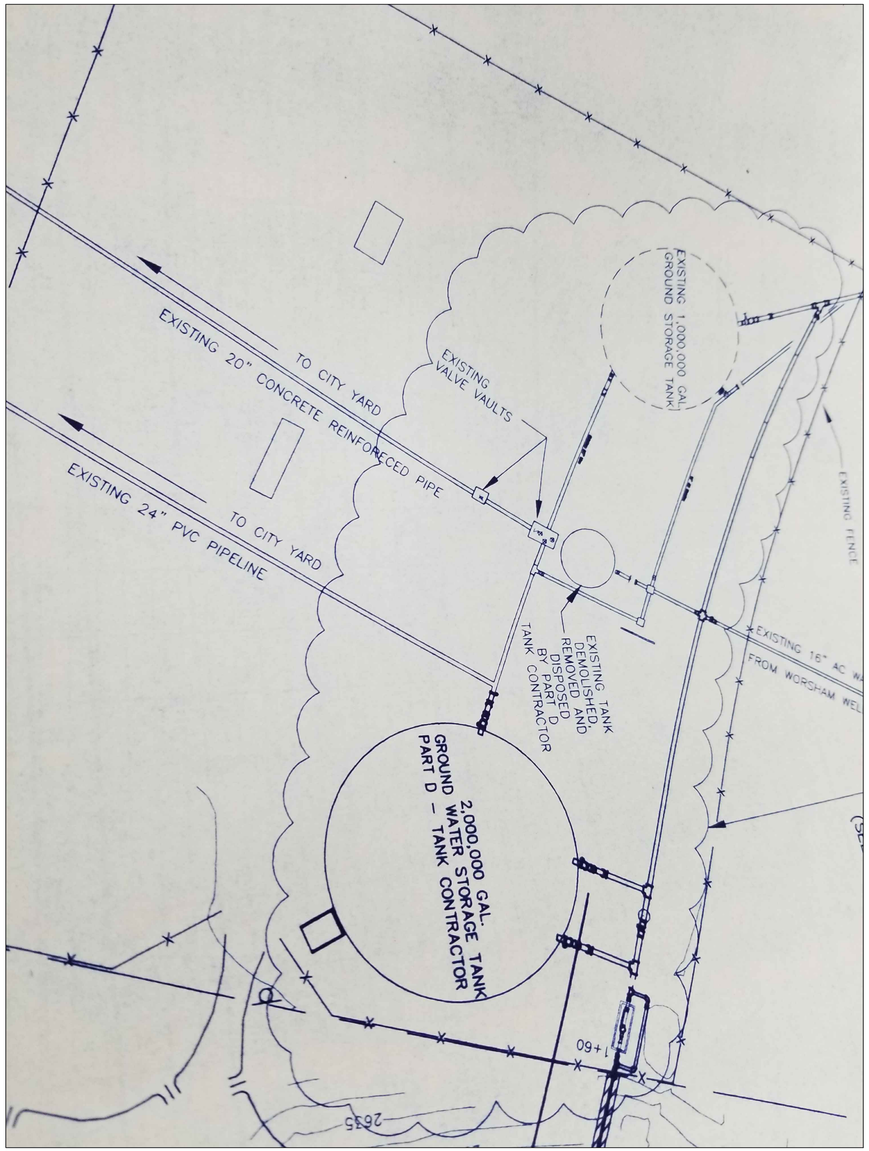


**EXISTING SITE**

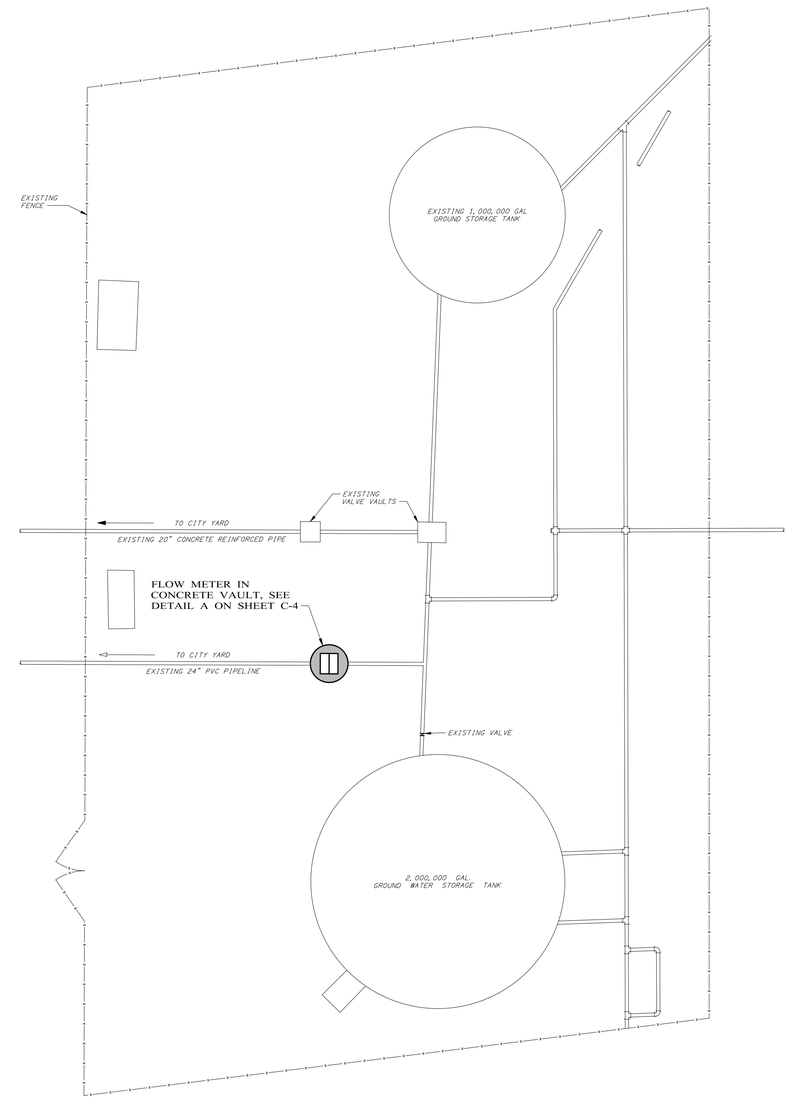


| NO. | REVISION | DATE |
|---|---|---|
| | | |

06/26/2020

JORDAN S. HIBBS 115729 LICENSED PROFESSIONAL ENGINEER

**ENPROTEC/HIBBS & TODD, INC.**
ENVIRONMENTAL AND CIVIL ENGINEERING
402 Cedar Street
325-698-5560
Abilene, Texas 79601
PE Firm Registration No. 1151
PG Firm Registration No. 50103
RPLS Firm Registration No. 10011900

BAR IS ONE INCH ON ORIGINAL DRAWING
0 1
IF NOT ONE INCH ON THIS SHEET, ADJUST SCALES ACCORDINGLY.

| | |
|---|---|
| DESIGNED BY J.S.H | SCALE NO SCALE |
| DRAWN BY A.R.S. | DATE 06/26/2020 |
| CHECKED BY M.A.W. | |

**TOWN OF PECOS CITY TEXAS SCADA IMPROVEMENTS**

**BLENDING TANKS FLOW METER INSTALL**

PROJECT NO.: 19-7469
SEQUENCE No. 2 OF 28
SHEET No. C1

**NOTES**

1. CONTRACTOR SHALL COORDINATE SHUTDOWNS WITH CITY.
2. NO DOWNSTREAM VALVES ARE PRESENT.
3. CONTRACTOR SHALL PLAN TO EVACUATE ANY WATER THAT COMES BACK WHEN CUTTING EXISTING PIPE.

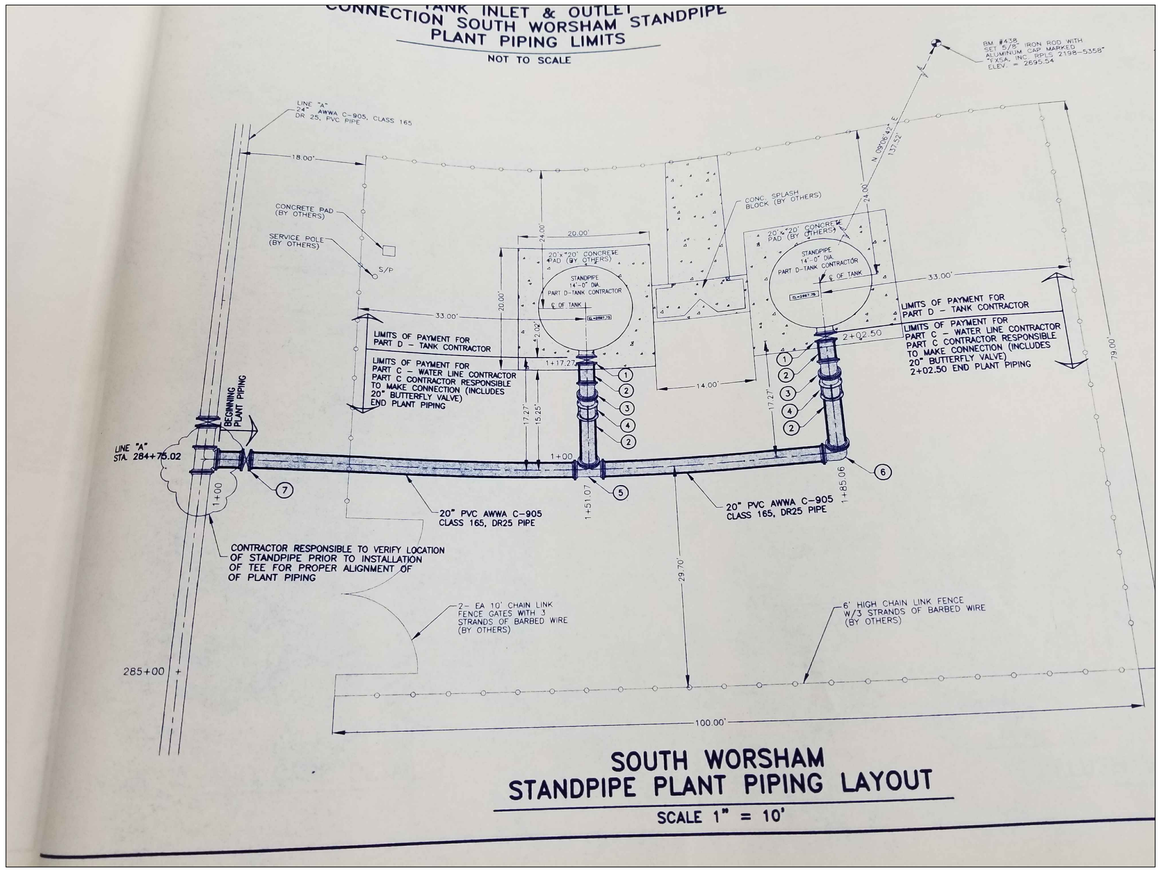


**EXISTING SITE**

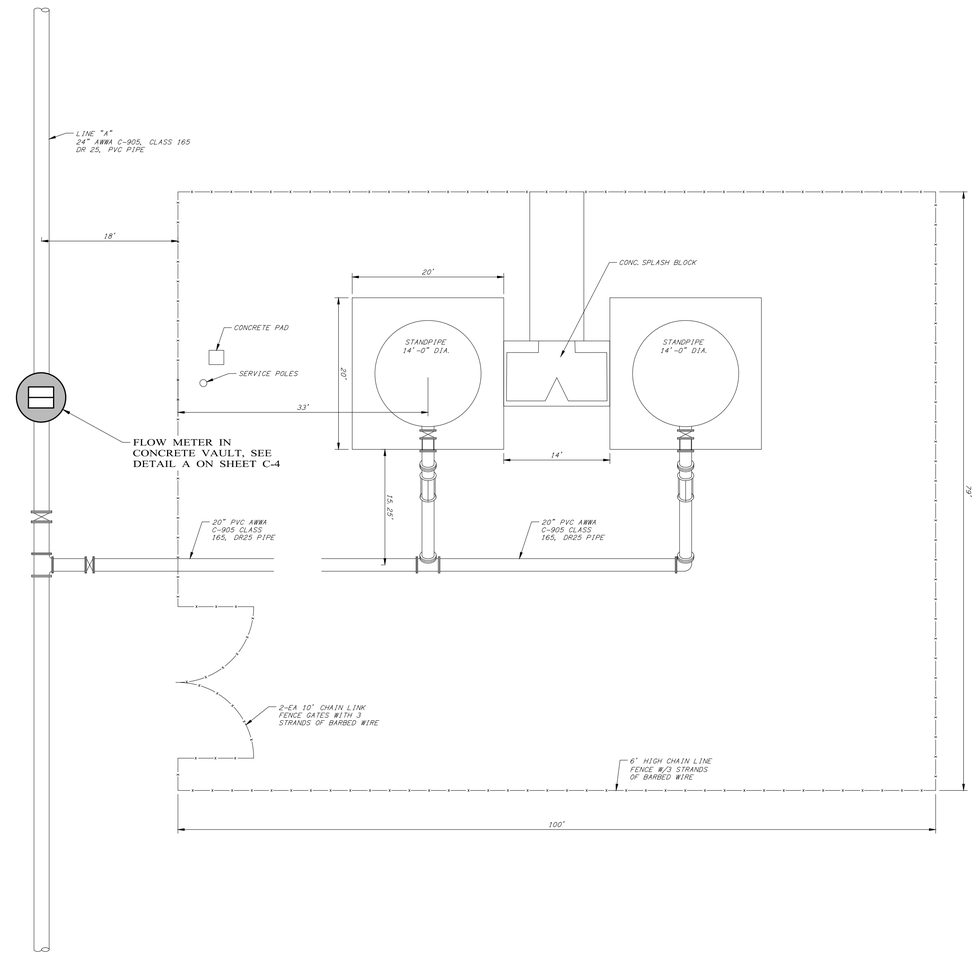


| NO. | REVISION | DATE |
|---|---|---|
| | | |

06/26/2020

JORDAN S. HIBBS
115729
LICENSED
STATE OF TEXAS

**ENPROTEC/HIBBS & TODD, INC.**
ENVIRONMENTAL AND CIVIL ENGINEERING
402 Cedar Street
325-698-5560
Abilene, Texas 79601
PE Firm Registration No. 1151
PG Firm Registration No. 50103
RPLS Firm Registration No. 10011900

BAR IS ONE INCH ON ORIGINAL DRAWING
0 1
IF NOT ONE INCH ON THIS SHEET, ADJUST SCALES ACCORDINGLY.

| DESIGNED BY | SCALE |
|---|---|
| J.S.H | NO SCALE |
| DRAWN BY A.R.S. | DATE |
| CHECKED BY M.A.W. | 06/26/2020 |

**TOWN OF PECOS CITY TEXAS**
**SCADA IMPROVEMENTS**

**TWIN TOWERS FLOW METER INSTALL**

PROJECT NO.: 19-7469
SEQUENCE No. 3 OF 28
SHEET No. C2

**EXISTING SITE**

**EXISTING AERIAL**

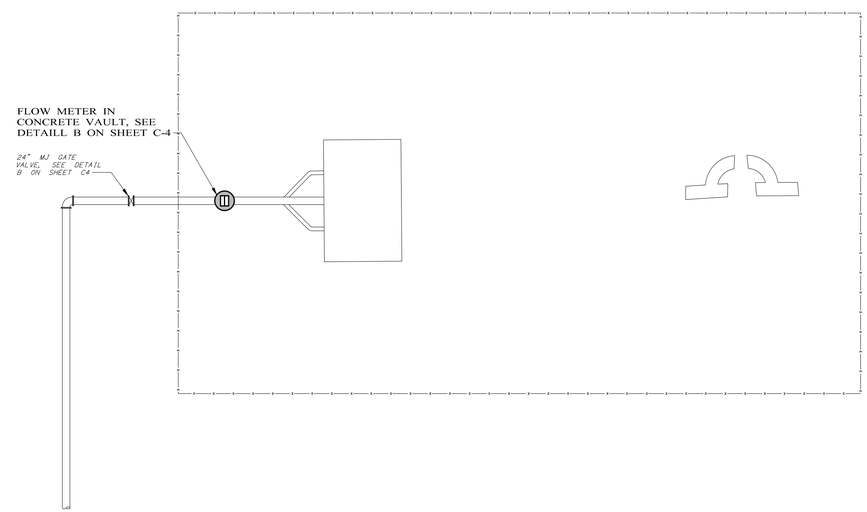


**NOTES**

1. CONTRACTOR SHALL INSTALL LINE STOP BY RANGELINE SERVICES OR ENGINEER - APPROVED EQUAL. LINE STOP SHALL BE INSTALLED DOWNSTREAM OF NEW FLOW METER AND VALVE IN ORDER TO DEWATER PIPELINE PRIOR TO INSTALLATION OF NEW FLOW METER AND VALVE.

| NO. | REVISION | DATE |
|---|---|---|
| | | |

06/26/2020

STATE OF TEXAS
JORDAN S. HIBBS
115729
LICENSED
PROFESSIONAL ENGINEER

**ENPROTEC/HIBBS & TODD, INC.**
ENVIRONMENTAL AND CIVIL ENGINEERING
402 Cedar Street
325-698-5560
Abilene, Texas 79601
PE Firm Registration No. 1151
PG Firm Registration No. 50103
RPLS Firm Registration No. 10011900

BAR IS ONE INCH ON ORIGINAL DRAWING
0 1
IF NOT ONE INCH ON THIS SHEET, ADJUST SCALES ACCORDINGLY.

| | |
|---|---|
| DESIGNED BY J.S.H | SCALE NO SCALE |
| DRAWN BY A.R.S. | DATE 06/26/2020 |
| CHECKED BY M.A.W. | |

**TOWN OF PECOS CITY TEXAS**
**SCADA IMPROVEMENTS**

**WARD BOOSTER PUMP STATION**
**FLOW METER INSTALL**

PROJECT NO.: 19-7469
SEQUENCE No. 4 OF 28
SHEET No. C3

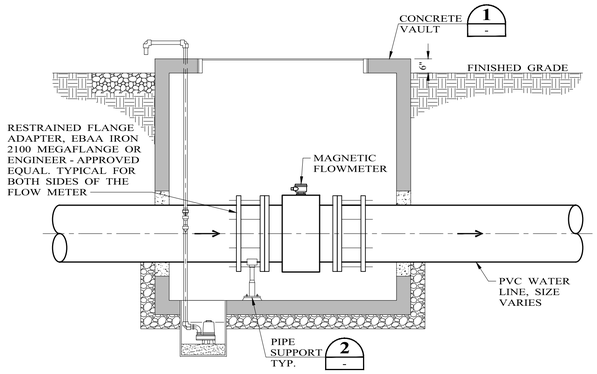


**NOTES**

1. FLOW METER SHALL BE SIEMENS SITRANS MAG 5100 W. REFER TO ELECTRICAL DRAWINGS FOR INFORMATION ON TRANSMITTER

## A — MAGNETIC FLOW METER VAULT DETAIL PVC PIPE

NO SCALE

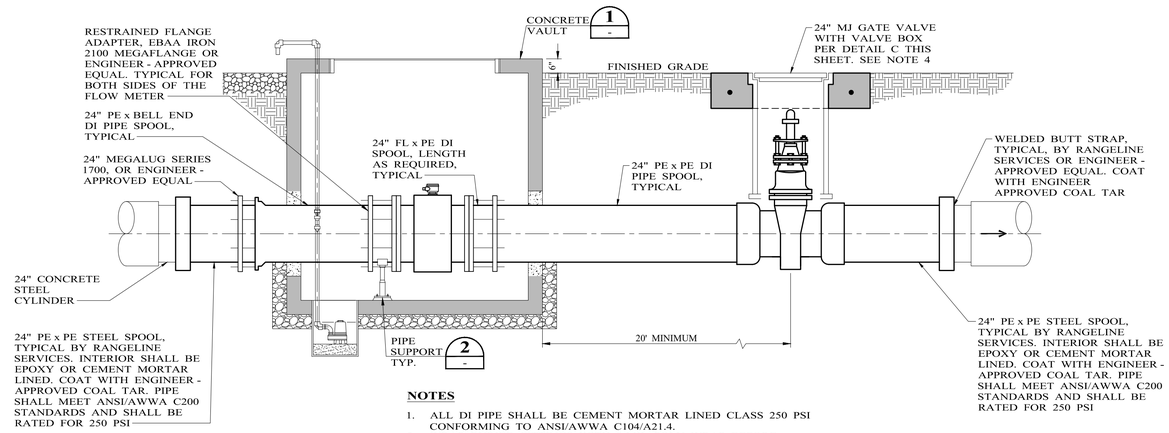


**NOTES**

1. ALL DI PIPE SHALL BE CEMENT MORTAR LINED CLASS 250 PSI CONFORMING TO ANSI/AWWA C104/A21.4.
2. WRAP BURIED FITTINGS WITH 8-MIL POLY WRAP BEFORE BACKFILLING.
3. FLOW METER SHALL BE SIEMENS SITRANS MAG 5100 W. REFER TO ELECTRICAL DRAWINGS FOR INFORMATION ON TRANSMITTER.
4. GATE VALVE SHALL BE RESILIENT WEDGE SEATED CONFORMING TO AWWA C515. VALVE SHALL BE RATED FOR 250 PSI. VALVE SHALL BE MECHANICALLY RESTRAINED WITH MEGALUG OR ENGINEER - APPROVED EQUAL RESTRAINTS.

## B — MAGNETIC FLOW METER VAULT DETAIL CONCRETE PIPE

NO SCALE

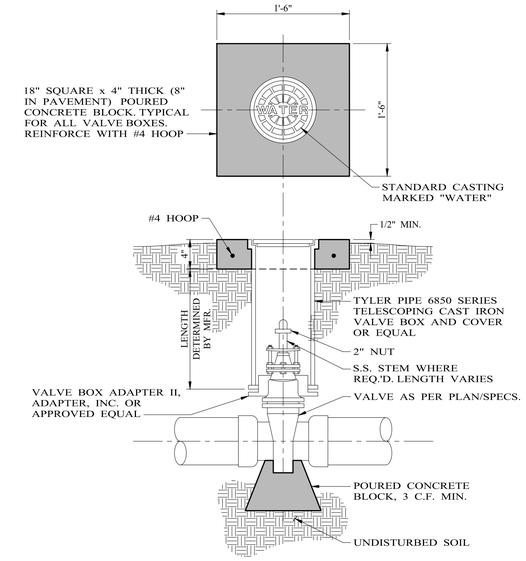


## C — TYPICAL VALVE BOX AND BLOCKING DETAIL

NO SCALE

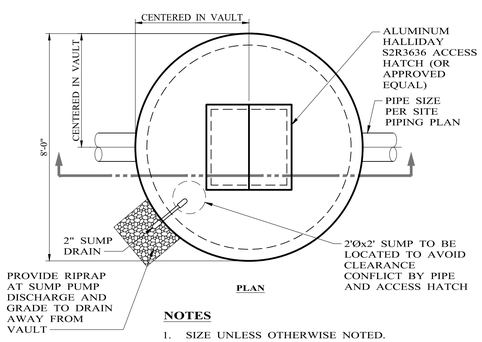


**PLAN**

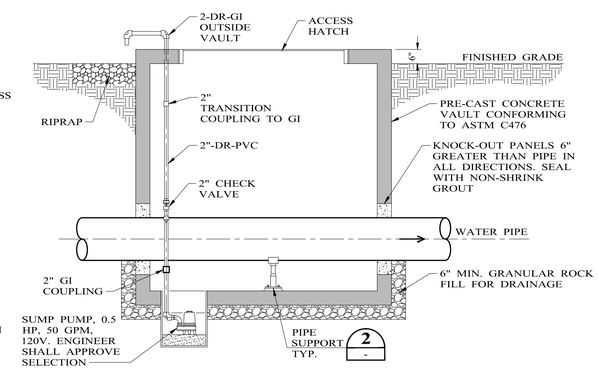


**SECTION**

**NOTES**

1. SIZE UNLESS OTHERWISE NOTED.

## 1 — CONCRETE VAULT

NO SCALE

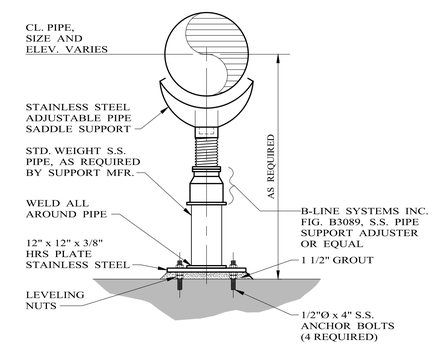


**NOTES**

1. WHERE METAL PIPE OTHER THAN S.S. IS UTILIZED, COMPLETELY SEPARATE PIPE FROM S.S. SADDLE SUPPORT WITH RUBBER GASKET.
2. MAXIMUM UNSUPPORTED LENGTH PER MANUFACTURER'S RECOMMENDATIONS.

## 2 — PIPE SUPPORT DETAIL

NO SCALE

| NO. | REVISION | DATE |
|---|---|---|
| | | |

06/26/2020

JORDAN S. HIBBS 115729 LICENSED PROFESSIONAL ENGINEER


ENPROTEC/HIBBS & TODD, INC.
ENVIRONMENTAL AND CIVIL ENGINEERING
402 Cedar Street
325-698-5560
Abilene, Texas 79601
PE Firm Registration No. 1151
PG Firm Registration No. 50103
RPLS Firm Registration No. 10011900


BAR IS ONE INCH ON ORIGINAL DRAWING
0 1
IF NOT ONE INCH ON THIS SHEET. ADJUST SCALES ACCORDINGLY.

| DESIGNED BY | SCALE |
|---|---|
| J.S.H | AS NOTED |
| DRAWN BY A.R.S. | DATE |
| CHECKED BY M.A.W. | 06/26/2020 |

# TOWN OF PECOS CITY TEXAS SCADA IMPROVEMENTS

## CIVIL DETAILS

PROJECT NO.: 19-7469

SEQUENCE No. 5 OF 28

SHEET No. C4

## ELECTRICAL PLAN LEGEND

| SYMBOL | DESCRIPTION |
|---|---|
| | ABOVE GROUND CONDUIT |
| | UNDERGROUND CONDUIT |
| GND | GROUND CONDUCTOR |
| | GROUND WELL |
| | FLOODLIGHT |
| $ | 20A, LIGHT SWITCH IN WEATHER-PROOF FS BOX |
| PE | PHOTO ELECTRIC SWITCH |
| PS | PRESSURE SWITCH |
| FIT | FLOW INDICATING TRANSMITTER |
| TIT | TEMPERATURE INDICATING TRANSMITTER |
| WP GFCI | 20A, 125V, GFI RECEPTACLE IN METAL-CLAD WEATHER PROOF WHILE-IN-USE COVER |
| J | JUNCTION BOX |
| R | ALARM BEACON |
| | WEATHERHEAD |

## CONTROL DIAGRAM LEGEND

| SYMBOL | DESCRIPTION |
|---|---|
| 100AF 2P 50AT | MOLDED CASE CIRCUIT BREAKER |
| | SELECTOR SWITCH |
| | PUSH BUTTON |
| CR/TD | CONTROL/ TIME-DELAY RELAY – PLUG IN |
| CR CR | RELAY CONTACT (NORMALLY OPEN – NORMALLY CLOSED) |
| TD | TIME-DELAY RELAY CONTACT |
| M | MOTOR STARTER COIL |
| OL | MOTOR OVERLOAD |
| ETM | ELAPSED TIME METER |
| G | INDICATING LIGHT – LED TYPE – PUSH-TO-TEST (COLOR AS SHOWN: G=GREEN, R=RED, A=AMBER, B=BLUE, W=WHITE |
| | MOTOR SPACE HEATER |
| TS | TEMPERATURE SWITCH |
| FS F | FLOAT SWITCH |
| A | SPECIAL DEVICE (SEE SCHEDULE THIS SHEET) |
| ▲ | ITEM LOCATED ON CONTROL PANEL SWING-OUT PANEL |

## ONE-LINE DIAGRAM LEGEND

| SYMBOL | DESCRIPTION | SYMBOL | DESCRIPTION |
|---|---|---|---|
| 100AF 2P 50AT | MOLDED CASE CIRCUIT BREAKER | | OILER HEATER WITH THERMOSTAT |
| | STARTER (SIZE NOTED) | MTS | MOTOR WINDING THERMOSTAT |
| HP | THREE-PHASE MOTOR (HORSEPOWER NOTED) | | POWER FACTOR CORRECTION CAPACITOR |
| | ELECTRICAL GROUND | M | MAGNETIC FLOW METER |
| PFR | PHASE FAILURE RELAY | N/G | NEUTRAL/GROUND BOND |
| PS | PRESSURE SWITCH | ETM | ELAPSED TIME METER |
| OS | OILER SOLENOID | G | INDICATING LIGHT (COLOR AS SHOWN: G=GREEN, R=RED, A=AMBER, B=BLUE, W=WHITE |
| TIT | TEMPERATURE INDICATING TRANSMITTER | | |
| LS | LOCAL LOCK STOP | HOA | HAND-OFF-AUTO SWITCH |
| TS | TEMPERATURE SWITCH | OA | OFF-AUTO SWITCH |
| VS | VIBRATION SWITCH | | |
| | FLOW METER | TD | TIME DELAY RELAY |
| SPD | SURGE PROTECTIVE DEVICE | ▲ | ITEM LOCATED ON CONTROL PANEL SWING-OUT PANEL |
| | MOTOR SPACE HEATER | | |
| A | SPECIAL DEVICE (SEE SCHEDULE THIS SHEET) | | |
| SSOL | SOLID STATE OVERLOAD | | |

## SPECIAL DEVICE SCHEDULE

| ITEM | DESCRIPTION | ITEM | DESCRIPTION |
|---|---|---|---|
| BS1 | CELLULAR MODEM SIGNAL BOOSTER – WILSON weBOOST SIGNAL 4G BOOSTER KIT #460119 OR APPROVED EQUAL | PC | DESKTOP PC – SEE SPECIFICATION 13320 HMI HARDWARE & SOFTWARE |
| BS2 | CELLULAR MODEM SIGNAL BOOSTER – CEL-FI GO X 100dB GAIN VERIZON BOOSTER KIT | PLC | PROGRAMMABLE LOGIC CONTROLLER – SCADAPACK 32, SEE SPECIFICATION 13321-I&C PLC HARDWARE |
| CA1 | 3G/4G VERIZON WIRELESS CELLULAR ANTENNA – LAIRD TRA6927M3PB-001 | PGS | SYSTEM PRESSURE GAUGE – ASHCROFT 0-100 PSI, 3.5" FACE, MODEL NO. 35-1009AW-02BXFF/0-100# |
| CA2 | WAVEFORM MIMO LOG PERIODIC LTE/5G ROUTER EXTERNAL DUAL 11 dBi YAGI ANTENNAS WITH RSRF LIGHTING SURGE PROTECTOR KITS. MOUNT ANTENNAS HIGH ENOUGH FOR LINE OF SITE WITH VERIZON TOWER. SIZE ANTENNA CABLES FOR DISTANCE FROM CELLULAR MODEM | POE | POWER OVER ETHERNET INJECTOR (GROUNDED) – UBIQUITI |
| | | PTS | PRESSURE TRANSMITTER – ROSEMOUNT MODEL #2088G2S2BA1M5 0-150 PSI MAX WITH INTERNAL LCD OUTPUT OR APPROVED FORXBORO OR ENDRESS-HAUSER EQUAL |
| CB | MINIATURE CIRCUIT BREAKER – THERMAL MINIATURE CIRCUIT BREAKER INSTALLED ON FEED-THROUGH TERMINAL BLOCKS, PHOENIX CONTACT TCP OR EQUAL | PWS | 24 VDC POWER SUPPLY WITH UPS – PHOENIX CONTACT TRIO SERIES W/QUINT-BAT – SIZE POWER SUPPLY FOR 50% GREATER THAN LOAD AND BATTERY FOR 15 MIN |
| CF | CABINET FAN – HOFFMAN CAT NO. A-PA4AXFN, 21 WATT, 120V (WITH RAIN SHIELD GRILLE) | QP | QUADRAPLEXOR – MULTI-STAGE ALTERNATOR, TIME MARK MODEL 441, 120VAC SUPPLY, FIRST-ON FIRST-OFF ALTERNATION |
| CH | CABINET HEATER – HOFFMAN CAT NO. DAH1001A, 115 VAC, 100 WATT | SP1 | SURGE PROTECTIVE DEVICE – UL 1449 4TH EDITION, NOMINAL 120V, DIN RAIL MOUNTED; PHOENIX CONTACT MODEL PT2-PE/S-120 AC/FM PART #2856812 APPROVED EQUAL |
| CM1 | SCADA CELLULAR MODEM – CRADLEPOINT IBR600C VERIZON WIRELESS, PROVIDE WITH 5-YEAR NETCLOUD ESSENTIALS SUBSCRIPTION & MSNSWITCH REMOTE POWER CYCLE DEVICE MODEL NO. UIS522B | SP2 | ETHERNET SURGE PROTECTOR – UBIQUITI ETH-SP-G2 |
| CM2 | SCADA CELLULAR VPN CONCENTRATOR – CRADLEPOINT AER4250 VERIZON WIRELESS, PROVIDE WITH 5-YEAR NETCLOUD ESSENTIALS SUBSCRIPTION & MSNSWITCH REMOTE POWER CYCLE DEVICE MODEL NO. UIS522B | SP3 | ANALOG SIGNAL SURGE PROTECTIVE DEVICE – PHOENIX CONTACT TT-2-PE/S1-24DC |
| CR | CONTROL RELAY – WITH 4 S.P.D.T. SWITCHES RATED 10 AMPS AT 120 VOLT, COIL VOLTAGE AS NEEDED, PLUG IN BASE AND SOCKET | TD1 | TIME DELAY RELAY – WITH 2 S.P.D.T. SWITCHES RATED 7 AMPS AT 120 VOLT, CONTACTS AND COIL, PLUG IN BASE AND SOCKET, 3 RANGES, 0.1 TO 100 SEC, ATC MODEL NO. 319D-134 |
| ES1 | ETHERNET SWITCH – 8 PORT SMART ETHERNET SWITCH WITH MODBUS TCP COMMUNICATION, -40 TO 75°C OPERATING TEMPERATURE, MOXA SDS-3008-T | UPS1 | UNINTERRUPTIBLE POWER SUPPLY – EATON 9SX SERIES WITH REALY OUTPUT CARD FOR CONNECTION TO STD. PROVIDE ADDITIONAL BATTERY PACKS FOR 60 MIN RUNTIME. |
| ETM | ELAPSED TIME METER – CRAMER #653S, 120 VOLT | UPS2 | UNINTERRUPTIBLE POWER SUPPLY – SOLA HD SPU 850 W/RELAY CARD |
| HMI | HMI – DELL OPTIPLEX XE3 W/ VTSCADA, DUAL 24" LED MONITORS, SEE SECTION 13320 – I&C – HMI HARDWARE & SOFTARE | UPS3 | NEMA 3R EXTENDED RUN UNINTERRUPTIBLE POWER SUPPLY – FALCON SSG, 120V, 1500VA, FOUR EXTENDED BATTERY PACKS, MAINTENANCE BYPASS SWITCH, NEMA 3R ENCLOSURE, BATTERIES RATED 12 YEAERS AT 25°C, 241 MINUTES RUNTIME AT 525W (STAND PIPES SITE) |
| HMI2 | PANEL PC – 15" LCD TOUCH DISPLAY, SEE SECTION 13320 – I&C – HMI HARDWARE & SOFTWARE | WR1 | ETHERNET WIRELESS RADIO – UBIQUITI POWERBEAM 5AC GEN W/PBE-RAD-400, SEE SECTION 13332-WIRELESS RADIOS |
| LT | INDICATING LIGHT – PUSH TO TEST, LED, 30MM, OIL TIGHT, PLASTIC LENS, 120 VOLT, 60 HZ. – COLOR AS INDICATED | WR2 | ETHERNET WIRELESS RADIO – UBIQUITI ROCKET 5AC PRISM GEN 2 W/AMO-5G13 OMNI ANTENNA OR RD-5G31-AC 31 dBi ANTENNA (PER PLAN), SEE SECTION 13332-WIRELESS RADIOS |
| MBP | UPS MAINTENANCE BYPASS SWITCH – EATON MODEL EHBPL1500R-PDU1U OR APPROVED EQUAL | | |

GENERAL NOTES:

1. ALL CONSTRUCTION SHALL COMPLY WITH LOCAL AND NATIONAL CODES AND REQUIREMENTS.
2. CONDUITS SHALL NOT BE ROUTED ACROSS WALKWAYS, PATHS OF ACCESS, TRAVEL, OR EGRESS. ROUTE BENEATH GRATINGS, IN CONCRETE STRUCTURES, OR AROUND EQUIPMENT. DO NOT ROUTE IN CONFLICT WITH OTHER PIPING, CONDUITS, EQUIPMENT, OR STRUCTURES.
3. CONDUITS SHOWN ARE FOR SIGNIFICANT PIECES OF ELECTRICAL EQUIPMENT AND IN A DIAGRAMMATICAL ORIENTATION FOR CLARITY. INSTALL ALL CONDUITS AND CONDUCTOR SPECIFIED IN OTHER ELECTRICAL SCHEMATICS, SCHEDULES, SPECIFICATIONS, AND AS REQUIRED FOR VENDOR SUPPLIED EQUIPMENT. ROUTE CONDUITS THE BEST WAY TO MINIMIZE BENDS.
4. CONTRACTOR SHALL BE RESPONSIBLE FOR OBTAINING ANY AND ALL PERMITS ASSOCIATED WITH THE WORK. THE COSTS OF THE PERMITS, IF ANY, SHALL BE BORNE BY THE CONTRACTOR.
5. VERIFY BY FIELD INVESTIGATION THE LOCATIONS OF ALL UTILITY FACILITIES WITHIN AND ADJACENT TO THE LIMITS OF THE WORK THAT MAY BE AFFECTED BY THE WORK. CONFLICTS WHICH ARISE DUE TO THE NEGLIGENCE OF THE CONTRACTOR TO LOCATE, HORIZONTALLY AND VERTICALLY, EXISTING UTILITIES SHALL BE THE SOLE RESPONSIBILITY OF THE CONTRACTOR.
6. ALL ASPECTS OF THIS INSTALLATION MUST COMPLY WITH THE LATEST UTILITY CO. STANDARDS. REVIEW THIS PROJECT'S SERVICE REQUIREMENTS OF LOCATION, RATINGS, AND METHODS WITH POWER COMPANY PRIOR TO BEGINNING CONSTRUCTION. CONTRACTOR IS RESPONSIBLE FOR ALL COORDINATION WITH UTILITY COMPANY.
7. ALL POWER AND ANALOG INSTRUMENTATION CONDUCTORS SHALL BE INSTALLED IN SEPARATE CONDUITS.
8. ALL EXTERIOR ABOVE GRADE CONDUIT SHALL BE RIGID GALVANIZED STEEL CONDUIT WITH GALVANIZED STEEL MOUNTING HARDWARE. CONDUITS WITHIN CHEMICAL ROOMS SHALL BE SCH 40 PVC. FITTINGS/BOXES IN CHEMICAL ROOMS SHALL BE INSTALLED WITH CARLON PLASTIC HARDWARE.
9. REMOVE ALL CONDUIT AND CONDUCTORS FOR ABANDONED EQUIPMENT. FOR ALL DEMOLITION WORK, REMOVE ALL CONDUCTORS AND ALL CONDUIT TO 6" BELOW GRADE AND CAP.
10. SEAL ALL CONDUITS THROUGH EXISTING WALLS WITH NON-SHRINK CEMENTITIOUS GROUT. PAINT GROUT TO MATCH EXISTING INTERIOR AND EXTERIOR WALL COLORS.
11. REPAIR ALL DAMAGE TO ROADS AND SIDEWALKS NECESSARY FOR CONSTRUCTION TO PRE-EXISTING CONDITION OR BETTER.
12. PROVIDE TRADITIONAL "NEMA" DEVICES AS DEFINED IN NEMA STANDARDS PUBLICATION NO. ICS 2.4.2003. IEC COMPONENTS ARE NOT ALLOWED.
13. RETURN ALL REPLACED SCADAPACK PLCS TO OWNER.
14. ALL PROPOSED ELECTRICAL AND SCADA ENCLOSURES LOCATED OUTDOORS SHALL BE NEMA 4X S.S.
15. ALL PROPOSED ETHERNET CABLES SHALL BE UBIQUITI TOUGHCABLECARRIER OUTDOOR SHIELDED CAT5E ETHERNET CABLE (LEVEL 2) WITH UBIQUITI TOUGHCABLE CONNECTORS.
16. THE EXISTING SCADA SYSTEM SHALL REMAIN OPERATIONAL THROUGHOUT CONSTRUCTION, EXCEPT WHERE SPECIFIC OUTAGES ARE SCHEDULED AND APPROVED BY THE OWNER AND ENGINEER. PROVIDE ALL NECESSARY TEMPORARY MODIFICATIONS TO KEEP OVERALL WATER SYSTEM OPERATING. ALL WORK SHALL BE COORDINATED WITH THE OWNER AND ENGINEER TO MINIMIZE IMPACT ON DAILY OPERATION.
17. DEMO EXISTING SCADA SYSTEM AFTER PROPOSED SYSTEM IS ONLINE. RETURN ALL EXIST SCADAPACK 32 PLCS TO OWNER.

ABBREVIATIONS

#PDT – # POLE, DOUBLE THROW; WHERE # IS # OF POLES (S=SINGLE, D=DOUBLE)
A – AMPS OR AMPERES
ASP – AUTOSENSORY PANEL
BC – BARE COPPER
C – CONDUIT
CC – COPPER CLAD
CGB – CABLE GLAND BUSHING
CLR – CLEARANCE
CR – CONTROL RELAY
DTL – DETAIL
ETM – ELAPSED TIME METER
EW – EACH WAY
FG – FINISHED GRADE
FL – FLOOD LIGHT
FIN – FINISHED (AS IN FINISHED GRADE)
G; GND – GROUND
HDG – HOT DIPPED GALVANIZED
HTR – HEATER
M – MOTOR
MIN – MINIMUM
MLO – MAIN LUGS ONLY
MSH – MOTOR SPACE HEATER
NEMA – NATIONAL ELECTRICAL MANUFACTURERS ASSOCIATION
N; NEU – NEUTRAL
NG – NEUTRAL/GROUND BOND
NTS – NOT TO SCALE
OC – OFF CENTER
OL – OVERLOAD
P – POLES
PFCC – POWER FACTOR CORRECTION CAPACITOR
PROP – PROPOSED
PVC – POLYVINYL CHLORIDE
RGS – RIGID GALVANIZED STEEL
SCH – SCHEDULE
SHT – SHEET
SPD – SURGE PROTECTIVE DEVICE
S.S.; STN STL – STAINLESS STEEL
TD – TIME DELAY RELAY
TYP – TYPICAL
V – VOLT/VOLTAGE
W/ – WITH
WIU – WHILE IN USE
WP – WEATHERPROOF OR WEATHER PROTECTED
GFCI – GROUND FAULT CIRCUIT INTERRUPTER

BAIRD GILROY & DIXON
ELECTRICAL ENGINEERS
9711 S. Mason Rd.
Ste. 125, #326
Richmond, TX 77407
(281) 529-5005
www.bgdeng.com
TBPE No. F-16575
Job No. 115-0030

| NO. | REVISION | DATE |
|---|---|---|
| | | |

7/6/20

STATE OF TEXAS
JOHN W. GILROY, JR.
112871
LICENSED PROFESSIONAL ENGINEER

ENPROTEC/HIBBS & TODD, INC.
ENVIRONMENTAL AND CIVIL ENGINEERING
402 Cedar Street
325-698-5560
Abilene, Texas 79601
PE Firm Registration No. 1151
PG Firm Registration No. 50103
RPLS Firm Registration No. 10011900

BAR IS ONE INCH ON ORIGINAL DRAWING
0 1
IF NOT ONE INCH ON THIS SHEET. ADJUST SCALES ACCORDINGLY.

| | |
|---|---|
| DESIGNED BY | JWG |
| DRAWN BY | JWG |
| CHECKED BY | JAD |
| SCALE | AS NOTED |
| DATE | 7/3/2020 |

TOWN OF PECOS CITY TEXAS
SCADA IMPROVEMENTS

ELECTRICAL LEGENDS, ABBREVIATIONS, AND NOTES

PROJECT NO.: 19-7469
SEQUENCE No. 6 OF 28
SHEET No. E1

## SITE LOCATION TABLE

| MARK | AREA | TYPE | NAME/ NUMBER | COORDINATES |
|---|---|---|---|---|
| 1 | SOUTH WORSHAM FIELD | REMOTE WELL | 50-25-1 | 31°14'13.36"N 103°16'46.46"W |
| 2 | SOUTH WORSHAM FIELD | REMOTE WELL | 50-25-5 | 31°14'13.45"N 103°16'17.89"W |
| 3 | SOUTH WORSHAM FIELD | REMOTE WELL | 50-25-6 | 31°14'20.94"N 103°17'05.36"W |
| 4 | SOUTH WORSHAM FIELD | REMOTE WELL | 50-25-7 | 31°14'37.51"N 103°17'14.45"W |
| 5 | SOUTH WORSHAM FIELD | REMOTE WELL | 50-25-8 | 31°14'37.63"N 103°16'46.27"W |
| 6 | SOUTH WORSHAM FIELD | REMOTE WELL | 50-23-3 | 31°14'41.39"N 103°17'47.44"W |
| 7 | SOUTH WORSHAM FIELD | REMOTE WELL | 50-24-1 | 31°15'01.83"N 103°16'47.47"W |
| 8 | SOUTH WORSHAM FIELD | REMOTE WELL | 50-23-2 | 31°15'05.67"N 103°17'19.23"W |
| 9 | SOUTH WORSHAM FIELD | REMOTE WELL | 50-21-2 | 31°15'29.64"N 103°19'21.19"W |
| 10 | SOUTH WORSHAM FIELD | REMOTE WELL | 50-13-3 | 31°15'34.12"N 103°16'46.55"W |
| 11 | SOUTH WORSHAM FIELD | REMOTE WELL | 50-13-4 | 31°15'34.16"N 103°16'18.42"W |
| 12 | SOUTH WORSHAM FIELD | REMOTE WELL | 50-15-1 | 31°15'52.53"N 103°18'35.49"W |
| 13 | SOUTH WORSHAM FIELD | REMOTE WELL | 50-13-2 | 31°15'59.58"N 103°17'14.86"W |
| 14 | SOUTH WORSHAM FIELD | REMOTE WELL | 50-13-1 | 31°16'00.87"N 103°16'49.17"W |
| 15 | SOUTH WORSHAM FIELD | REMOTE WELL | 50-09-2 | 31°16'49.83"N 103°19'21.40"W |
| 16 | SOUTH WORSHAM FIELD | REMOTE WELL | 50-10-1 | 31°16'49.88"N 103°19'00.65"W |
| 17 | SOUTH WORSHAM FIELD | REMOTE WELL | 50-10-2 | 31°16'50.00"N 103°18'39.04"W |
| 18 | SOUTH WORSHAM FIELD | TANK | STAND PIPES | 31°16'53.51"N 103°18'12.04"W |
| 19 | WORSHAM WELL FIELD | REMOTE WELL | 11 | 31°19'30.86"N 103°16'31.14"W |
| 20 | WORSHAM WELL FIELD | REMOTE WELL | 10 | 31°19'56.46"N 103°17'24.71"W |
| 21 | WORSHAM WELL FIELD | REMOTE WELL | 16 | 31°20'13.99"N 103°17'57.29"W |
| 22 | WORSHAM WELL FIELD | REMOTE WELL | 17 | 31°20'41.42"N 103°17'43.99"W |
| 23 | WORSHAM WELL FIELD | REMOTE WELL | 12 | 31°20'44.85"N 103°17'57.42"W |
| 24 | BLENDING TANKS | TANK | BLENDING TANK | 31°21'18.05"N 103°20'03.70"W |
| 25 | WARD BOOSTER PUMP STATION | PUMP STATION | BOOSTER PUMP STATION | 31°22'37.86"N 103°16'15.12"W |
| 26 | CITY YARD | ELEVATED TANK | SOUTH TANK | 31°23'37.95"N 103°31'28.93"W |
| 27 | CITY YARD | TANK | CITY YARD TANKS | 31°24'39.97"N 103°29'29.60"W |
| 28 | CITY YARD | PUMP STATION | PUMP HOUSE | 31°24'47.80"N 103°29'27.69"W |
| 29 | CITY YARD | ELEVATED TANK | WEST TANK | 31°24'55.75"N 103°30'17.08"W |
| 30 | CITY YARD | ELEVATED TANK | EAST TANK | 31°25'28.70"N 103°29'19.52"W |
| 31 | CITY YARD | ELEVATED TANK | AIRPORT TANK | 31°23'33.6"N 103°30'29.3"W |
| 32 | WARD COUNTY FIELD | REMOTE WELL | 7 | 31°28'19.32"N 103°01'58.03"W |
| 33 | WARD COUNTY FIELD | REMOTE WELL | 4 | 31°28'36.19"N 103°01'38.69"W |
| 34 | WARD COUNTY FIELD | TANK | WARD TANK | 31°28'47.84"N 103°02'48.47"W |
| 35 | WARD COUNTY FIELD | REMOTE WELL | 5 | 31°28'48.38"N 103°02'48.58"W |
| 36 | WARD COUNTY FIELD | REMOTE WELL | 1-B | 31°28'48.75"N 103°01'27.66"W |
| 37 | WARD COUNTY FIELD | REMOTE WELL | 2 | 31°29'07.16"N 103°01'45.07"W |
| 38 | WARD COUNTY FIELD | REMOTE WELL | 6 | 31°29'08.21"N 103°02'28.65"W |
| 39 | WARD COUNTY FIELD | REMOTE WELL | 3 | 31°29'27.94"N 103°02'14.39"W |

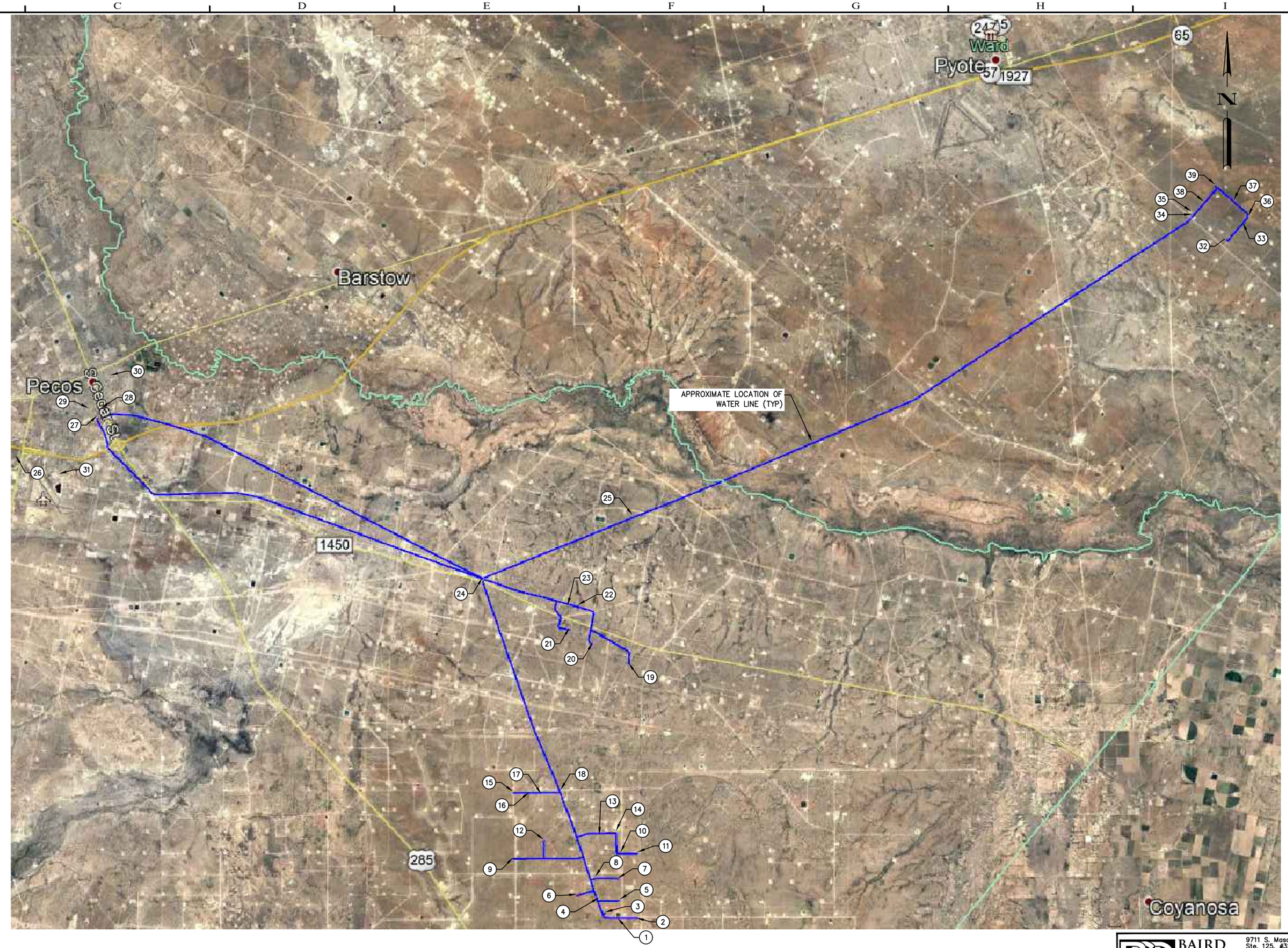



BAIRD GILROY & DIXON
ELECTRICAL ENGINEERS
9711 S. Mason Rd.
Ste. 125, #326
Richmond, TX 77407
(281) 529-5005
www.bgdeng.com
TBPE No. F-16575
Job No. 115-0030


| NO. | REVISION | DATE |
|---|---|---|
| | | |

7/6/20

STATE OF TEXAS
JOHN W. GILROY, JR.
112871
LICENSED PROFESSIONAL ENGINEER


ENPROTEC/HIBBS & TODD, INC.
ENVIRONMENTAL AND CIVIL ENGINEERING
402 Cedar Street
Abilene, Texas 79601
325-698-5560
PE Firm Registration No. 1151
PG Firm Registration No. 50103
RPLS Firm Registration No. 10011900


BAR IS ONE INCH ON ORIGINAL DRAWING
0 1
IF NOT ONE INCH ON THIS SHEET, ADJUST SCALES ACCORDINGLY.

| | |
|---|---|
| DESIGNED BY JWG | SCALE AS NOTED |
| DRAWN BY JWG | DATE 7/3/2020 |
| CHECKED BY JAD | |

**TOWN OF PECOS CITY TEXAS**
**SCADA IMPROVEMENTS**

# OVERALL LOCATION SITE PLAN

PROJECT NO.: 19-7469
SEQUENCE No. 7 OF 28
SHEET No. E2

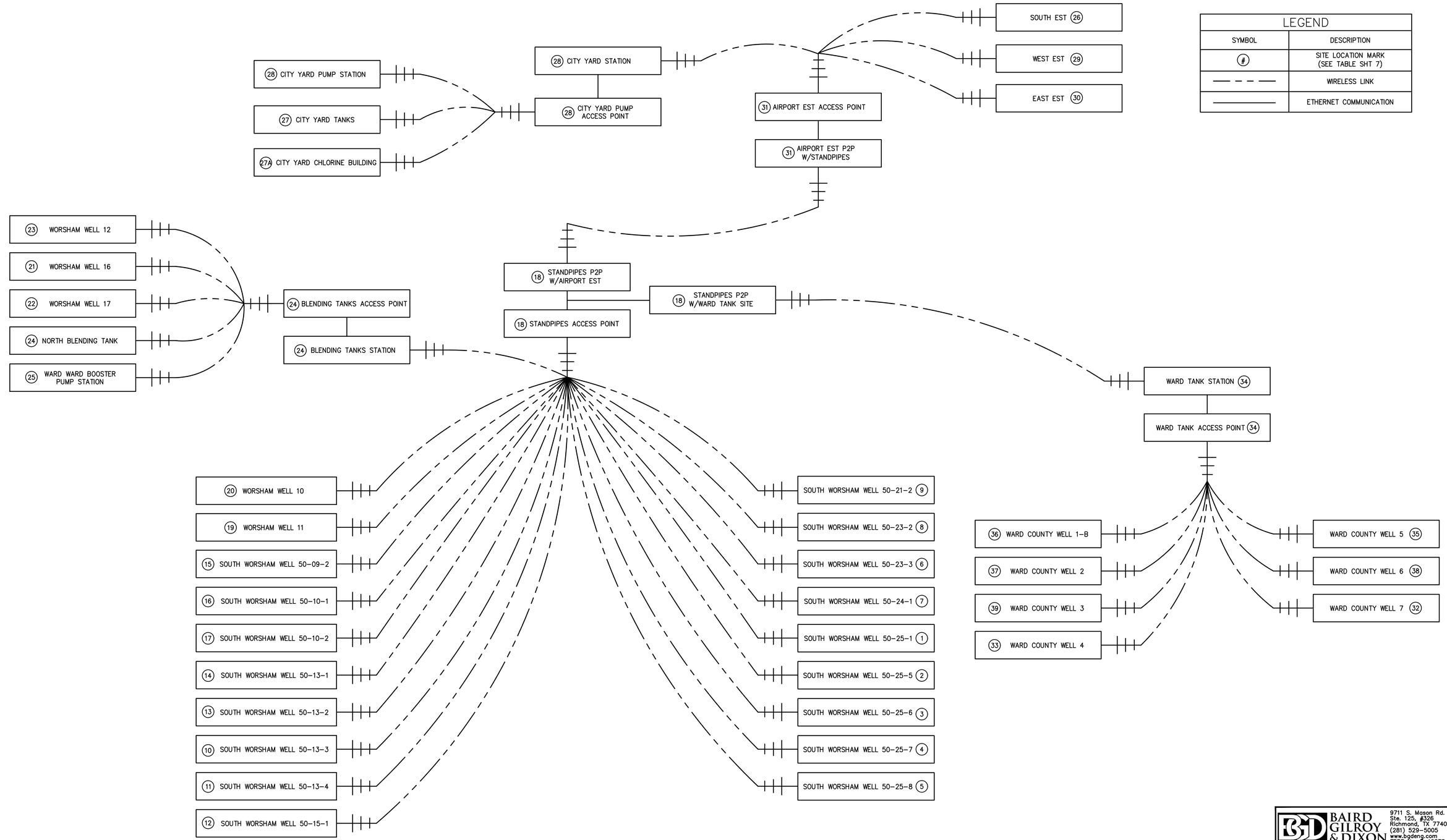


| LEGEND | |
|---|---|
| SYMBOL | DESCRIPTION |
| # | SITE LOCATION MARK (SEE TABLE SHT 7) |
| — — — | WIRELESS LINK |
| ——— | ETHERNET COMMUNICATION |

BAIRD GILROY & DIXON
ELECTRICAL ENGINEERS
9711 S. Mason Rd.
Ste. 125, #326
Richmond, TX 77407
(281) 529-5005
www.bgdeng.com
TBPE No. F-16575
Job No. 115-0030

| NO. | REVISION | DATE |
|---|---|---|
| | | |

7/6/20

STATE OF TEXAS
JOHN W. GILROY, JR.
112871
LICENSED
PROFESSIONAL ENGINEER

**ENPROTEC/HIBBS & TODD, INC.**
ENVIRONMENTAL AND CIVIL ENGINEERING
402 Cedar Street
325-698-5560
Abilene, Texas 79601
PE Firm Registration No. 1151
PG Firm Registration No. 50103
RPLS Firm Registration No. 10011900

BAR IS ONE INCH ON ORIGINAL DRAWING
0 1
IF NOT ONE INCH ON THIS SHEET, ADJUST SCALES ACCORDINGLY.

| DESIGNED BY | SCALE |
|---|---|
| JWG | AS NOTED |
| DRAWN BY JWG | DATE 7/3/2020 |
| CHECKED BY JAD | |

**TOWN OF PECOS CITY TEXAS**
**SCADA IMPROVEMENTS**

**OVERALL WIRELESS RADIO COMMUNICATION PLAN**

PROJECT NO.: **19-7469**
SEQUENCE No. **8 OF 28**
SHEET No. **E3**

## CITY YARD

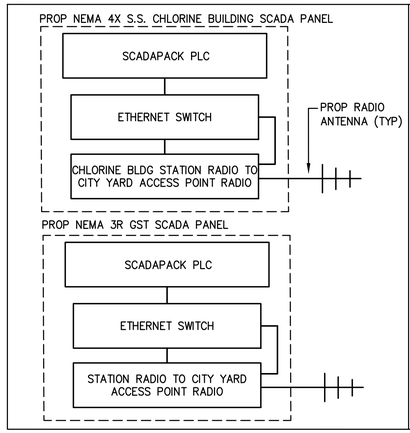


## HIGH SERVICE PUMP BUILDING

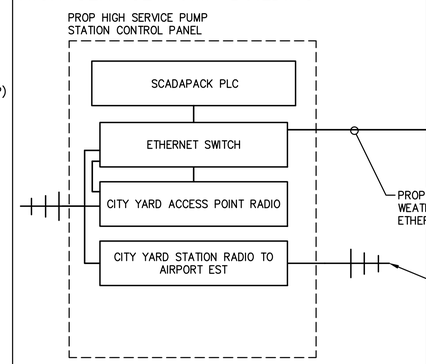


## ADMIN BUILDING – MASTER STATION

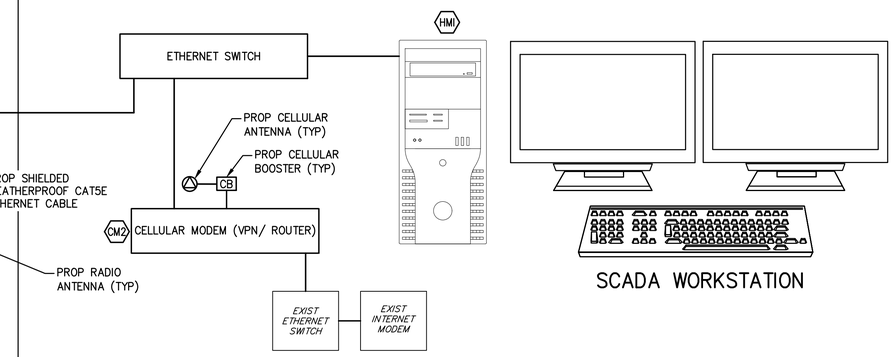


## STANDPIPES

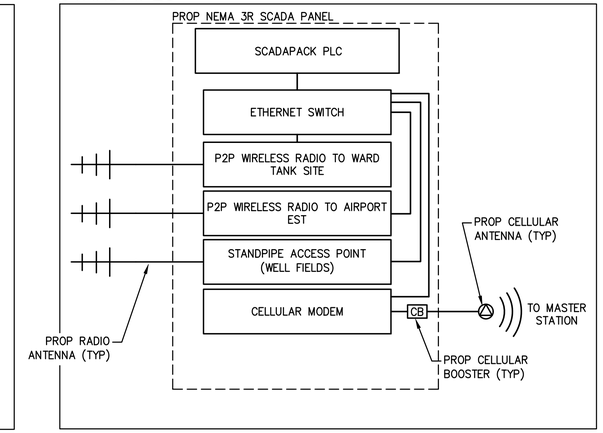


## AIRPORT EST

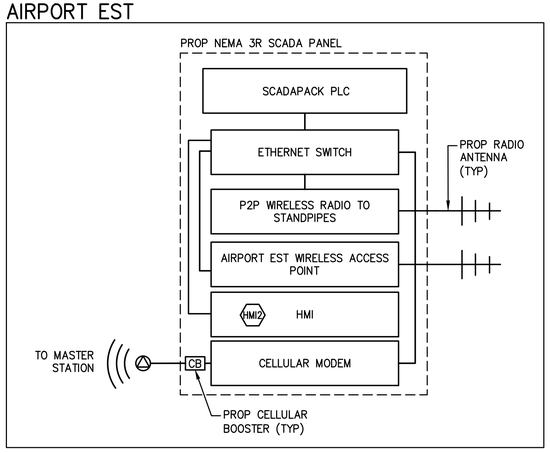


## SOUTH EST

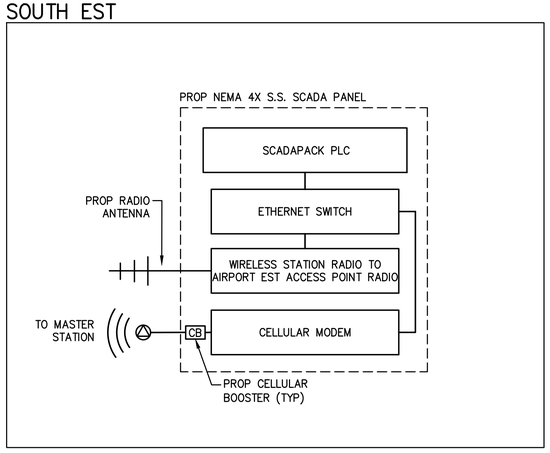


## WEST EST

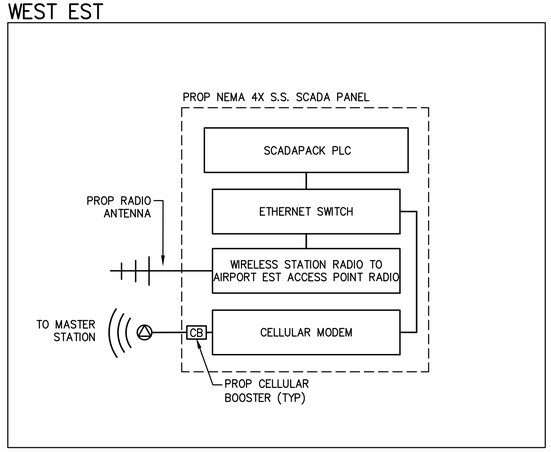


## EAST EST

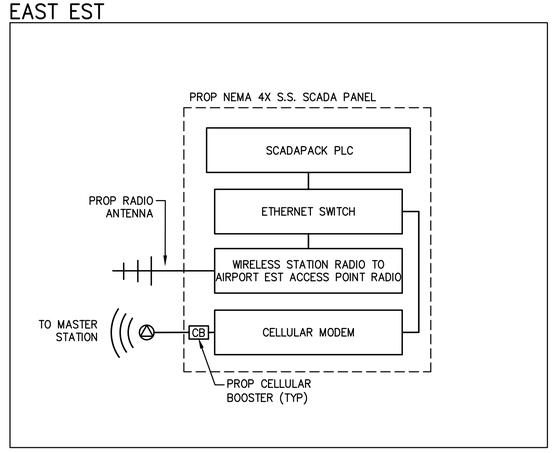


## WARD BOOSTER PUMP STATION

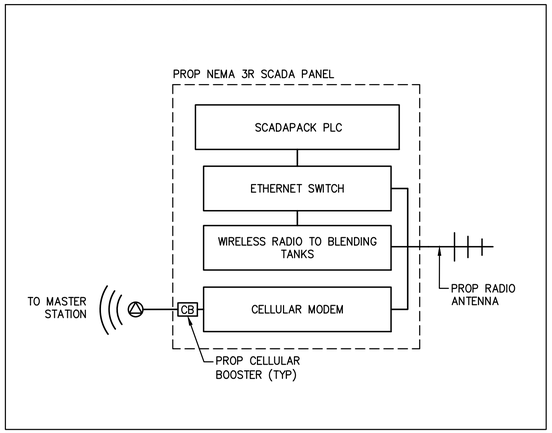


## WARD TANK

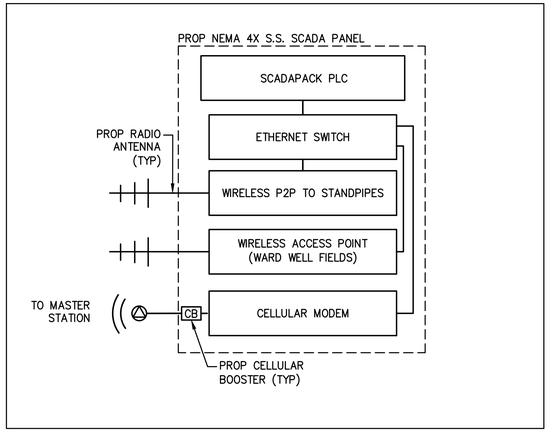


## SOUTH WORSHAM WELL FIELD (TYPICAL – x17)

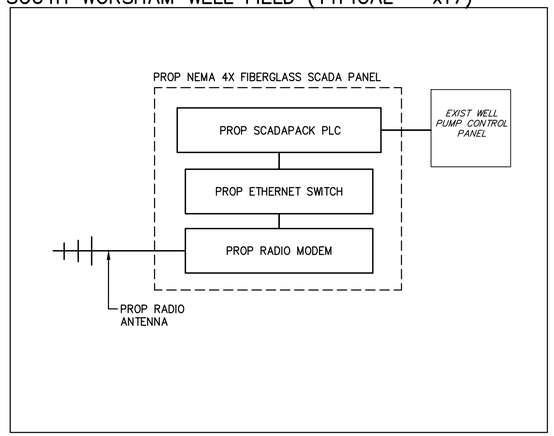


| LEGEND | |
|---|---|
| SYMBOL | DESCRIPTION |
| ———— | ETHERNET CABLE |


BAIRD GILROY & DIXON
ELECTRICAL ENGINEERS
9711 S. Mason Rd.
Ste. 125, #326
Richmond, TX 77407
(281) 529-5005
www.bgdeng.com
TBPE No. F-16575
Job No. 115-0030


| NO. | REVISION | DATE |
|---|---|---|
| | | |

7/6/20

STATE OF TEXAS — JOHN W. GILROY, JR. — 112871 — LICENSED PROFESSIONAL ENGINEER


ENPROTEC/HIBBS & TODD, INC.
ENVIRONMENTAL AND CIVIL ENGINEERING
402 Cedar Street
325-698-5560
Abilene, Texas 79601
PE Firm Registration No. 1151
PG Firm Registration No. 50103
RPLS Firm Registration No. 10011900


BAR IS ONE INCH ON ORIGINAL DRAWING
0 1
IF NOT ONE INCH ON THIS SHEET, ADJUST SCALES ACCORDINGLY.

| DESIGNED BY | SCALE |
|---|---|
| JWG | AS NOTED |
| DRAWN BY JWG | DATE |
| CHECKED BY JAD | 7/3/2020 |

**TOWN OF PECOS CITY TEXAS**
**SCADA IMPROVEMENTS**

**NETWORK ARCHITECTURE DIAGRAM SHEET 1**

PROJECT NO.: 19-7469
SEQUENCE No. 9 OF 28
SHEET No. E4

## BLENDING TANKS SITE

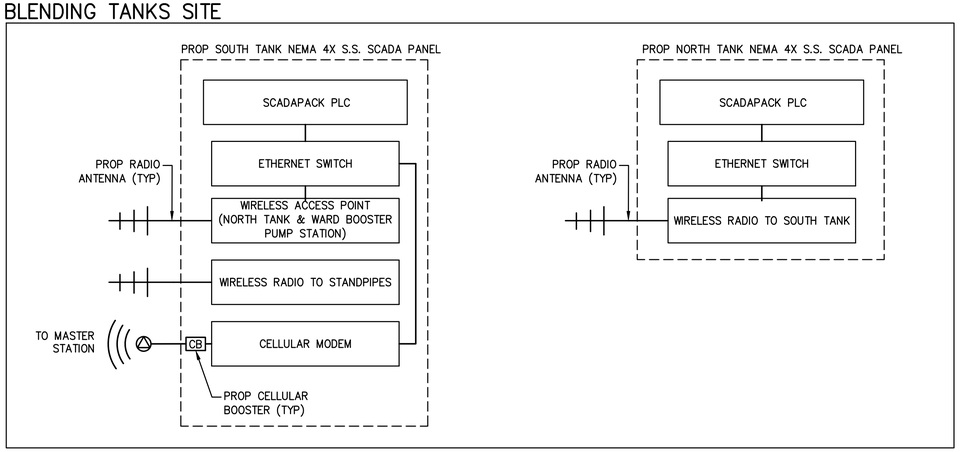


## SCADA EQUIPMENT TABLE

| SITE | SITE MARKER | BS1 | BS2 | CA1 | CA2 | CM1 | CM2 | ES1 | HMI | HMI2 | PLC | POE | PWS | SP2 | UPS1 | MBP | UPS2 | UPS3 | WR1 | WR2 | ENCLOSURE |
|---|---|---|---|---|---|---|---|---|---|---|---|---|---|---|---|---|---|---|---|---|---|
| SOUTH WORSHAM WELL 50-25-1 | 1 | - | - | - | - | - | - | 1 | - | - | 1 | 1 | 1 | 2 | - | - | 1 | - | 1 | - | PROP NEMA 4X FIBERGLASS |
| SOUTH WORSHAM WELL 50-25-5 | 2 | - | - | - | - | - | - | 1 | - | - | 1 | 1 | 1 | 2 | - | - | 1 | - | 1 | - | PROP NEMA 4X FIBERGLASS |
| SOUTH WORSHAM WELL 50-25-6 | 3 | - | - | - | - | - | - | 1 | - | - | 1 | 1 | 1 | 2 | - | - | 1 | - | 1 | - | PROP NEMA 4X FIBERGLASS |
| SOUTH WORSHAM WELL 50-25-7 | 4 | - | - | - | - | - | - | 1 | - | - | 1 | 1 | 1 | 2 | - | - | 1 | - | 1 | - | PROP NEMA 4X FIBERGLASS |
| SOUTH WORSHAM WELL 50-25-8 | 5 | - | - | - | - | - | - | 1 | - | - | 1 | 1 | 1 | 2 | - | - | 1 | - | 1 | - | PROP NEMA 4X FIBERGLASS |
| SOUTH WORSHAM WELL 50-23-3 | 6 | - | - | - | - | - | - | 1 | - | - | 1 | 1 | 1 | 2 | - | - | 1 | - | 1 | - | PROP NEMA 4X FIBERGLASS |
| SOUTH WORSHAM WELL 50-24-1 | 7 | - | - | - | - | - | - | 1 | - | - | 1 | 1 | 1 | 2 | - | - | 1 | - | 1 | - | PROP NEMA 4X FIBERGLASS |
| SOUTH WORSHAM WELL 50-23-2 | 8 | - | - | - | - | - | - | 1 | - | - | 1 | 1 | 1 | 2 | - | - | 1 | - | 1 | - | PROP NEMA 4X FIBERGLASS |
| SOUTH WORSHAM WELL 50-21-2 | 9 | - | - | - | - | - | - | 1 | - | - | 1 | 1 | 1 | 2 | - | - | 1 | - | 1 | - | PROP NEMA 4X FIBERGLASS |
| SOUTH WORSHAM WELL 50-13-3 | 10 | - | - | - | - | - | - | 1 | - | - | 1 | 1 | 1 | 2 | - | - | 1 | - | 1 | - | PROP NEMA 4X FIBERGLASS |
| SOUTH WORSHAM WELL 50-13-4 | 11 | - | - | - | - | - | - | 1 | - | - | 1 | 1 | 1 | 2 | - | - | 1 | - | 1 | - | PROP NEMA 4X FIBERGLASS |
| SOUTH WORSHAM WELL 50-15-1 | 12 | - | - | - | - | - | - | 1 | - | - | 1 | 1 | 1 | 2 | - | - | 1 | - | 1 | - | PROP NEMA 4X FIBERGLASS |
| SOUTH WORSHAM WELL 50-13-2 | 13 | - | - | - | - | - | - | 1 | - | - | 1 | 1 | 1 | 2 | - | - | 1 | - | 1 | - | PROP NEMA 4X FIBERGLASS |
| SOUTH WORSHAM WELL 50-13-1 | 14 | - | - | - | - | - | - | 1 | - | - | 1 | 1 | 1 | 2 | - | - | 1 | - | 1 | - | PROP NEMA 4X FIBERGLASS |
| SOUTH WORSHAM WELL 50-09-2 | 15 | - | - | - | - | - | - | 1 | - | - | 1 | 1 | 1 | 2 | - | - | 1 | - | 1 | - | PROP NEMA 4X FIBERGLASS |
| SOUTH WORSHAM WELL 50-10-1 | 16 | - | - | - | - | - | - | 1 | - | - | 1 | 1 | 1 | 2 | - | - | 1 | - | 1 | - | PROP NEMA 4X FIBERGLASS |
| SOUTH WORSHAM WELL 50-10-2 | 17 | - | - | - | - | - | - | 1 | - | - | 1 | 1 | 1 | 2 | - | - | 1 | - | 1 | - | PROP NEMA 4X FIBERGLASS |
| STAND PIPES | 18 | - | 1 | - | 1 | 1 | - | 1 | - | - | 1 | 3 | 1 | 6 | - | - | - | 1 | - | 3 | PROP NEMA 4X S.S. |
| WORSHAM WELL 11 | 19 | - | - | - | - | - | - | 1 | - | - | 1 | 1 | 1 | 2 | - | - | 1 | - | - | 1 | PROP NEMA 4X FIBERGLASS |
| WORSHAM WELL 10 | 20 | - | - | - | - | - | - | 1 | - | - | 1 | 1 | 1 | 2 | - | - | 1 | - | - | 1 | PROP NEMA 4X FIBERGLASS |
| WORSHAM WELL 16 | 21 | - | - | - | - | - | - | 1 | - | - | 1 | 1 | 1 | 2 | - | - | 1 | - | 1 | - | PROP NEMA 4X FIBERGLASS |
| WORSHAM WELL 17 | 22 | - | - | - | - | - | - | 1 | - | - | 1 | 1 | 1 | 2 | - | - | 1 | - | 1 | - | PROP NEMA 4X FIBERGLASS |
| WORSHAM WELL 12 | 23 | - | - | - | - | - | - | 1 | - | - | 1 | 1 | 1 | 2 | - | - | 1 | - | 1 | - | PROP NEMA 4X FIBERGLASS |
| SOUTH BLENDING TANK | 24 | - | 1 | - | 1 | 1 | - | 1 | - | - | 1 | 2 | 1 | 4 | 1 | 1 | - | - | - | 2 | PROP NEAM 4X S.S. |
| NORTH BLENDING TANK | 24A | - | - | - | - | - | - | 1 | - | - | 1 | 1 | 1 | 2 | 1 | 1 | - | - | 1 | - | PROP NEMA 4X S.S. |
| WARD BOOSTER PUMP STATION | 25 | - | 1 | - | 1 | 1 | - | 1 | - | - | 1 | 1 | 1 | 2 | 1 | 1 | - | - | - | 1 | PROP NEMA 3R |
| SOUTH ELEVATED STORAGE TANK | 26 | 1 | - | 1 | - | 1 | - | 1 | - | - | 1 | 1 | 1 | 2 | 1 | 1 | - | - | 1 | - | PROP NEAM 4X S.S. |
| CITY YARD TANKS | 27 | - | - | - | - | - | - | 1 | - | - | 1 | 1 | 1 | 2 | 1 | 1 | - | - | 1 | - | PROP NEMA 4X S.S |
| CITY YARD CHLORINE BLDG | 27A | - | - | - | - | - | - | 1 | - | - | 1 | 1 | 1 | 2 | 1 | 1 | - | - | 1 | - | PROP NEMA 4X S.S |
| CITY YARD PUMP STATION | 28 | 1 | - | 1 | - | - | 1 | 2 | - | - | 1 | 2 | 1 | 4 | 1 | 1 | - | - | 1 | 1 | PROP NEMA 3R |
| CITY YARD ADMINISTRATION BLDG | 28A | 1 | - | 1 | - | - | - | 1 | 1 | - | - | - | - | 2 | 1 | 1 | - | - | - | - | N/A |
| WEST ELEVATED STORAGE TANK | 29 | 1 | - | 1 | - | 1 | - | 1 | - | - | 1 | 1 | 1 | 2 | 1 | 1 | - | - | 1 | - | PROP NEMA 4X S.S. |
| EAST ELEVEATED STROAGE TANK | 30 | 1 | - | 1 | - | 1 | - | 1 | - | - | 1 | 1 | 1 | 2 | 1 | 1 | - | - | 1 | - | PROP NAME 4X S.S. |
| AIRPORT ELEVATED STORAGE TANK | 31 | 1 | - | 1 | - | 1 | - | 1 | - | 1 | 1 | 2 | 1 | 4 | 1 | 1 | - | - | - | 2 | PROP NEMA 3R |
| WARD REMOTE WELL 7 | 32 | - | - | - | - | - | - | 1 | - | - | 1 | 1 | 1 | 2 | - | - | 1 | - | 1 | - | PROP NEMA 4X FIBERGLASS |
| WARD REMOTE WELL 4 | 33 | - | - | - | - | - | - | 1 | - | - | 1 | 1 | 1 | 2 | - | - | 1 | - | 1 | - | PROP NEMA 4X FIBERGLASS |
| WARD TANK SITE | 34 | - | 1 | - | 1 | 1 | - | 1 | - | - | 1 | 2 | 1 | 4 | 1 | 1 | - | - | - | 2 | PROP NEAM 4X S.S. |
| WARD REMOTE WELL 5 | 35 | - | - | - | - | - | - | 1 | - | - | 1 | 1 | 1 | 2 | - | - | 1 | - | 1 | - | PROP NEMA 4X FIBERGLASS |
| WARD REMOTE WELL 1-B | 36 | - | - | - | - | - | - | 1 | - | - | 1 | 1 | 1 | 2 | - | - | 1 | - | 1 | - | PROP NEMA 4X FIBERGLASS |
| WARD REMOTE WELL 2 | 37 | - | - | - | - | - | - | 1 | - | - | 1 | 1 | 1 | 2 | - | - | 1 | - | 1 | - | PROP NEMA 4X FIBERGLASS |
| WARD REMOTE WELL 6 | 38 | - | - | - | - | - | - | 1 | - | - | 1 | 1 | 1 | 2 | - | - | 1 | - | 1 | - | PROP NEMA 4X FIBERGLASS |
| WARD REMOTE WELL 3 | 39 | - | - | - | - | - | - | 1 | - | - | 1 | 1 | 1 | 2 | - | - | 1 | - | 1 | - | PROP NEMA 4X FIBERGLASS |
| | | | | | | | | | | | | | | | | | | | | | |
| SPARES | - | 2 | 1 | 2 | 2 | 3 | 1 | 5 | - | - | 3 | 6 | 6 | 6 | 4 | 4 | 4 | - | 4 | 4 | N/A |
| | | | | | | | | | | | | | | | | | | | | | |
| **TOTAL** | **-** | **8** | **5** | **8** | **6** | **11** | **2** | **48** | **1** | **1** | **44** | **53** | **47** | **102** | **16** | **16** | **33** | **1** | **38** | **17** | |

## WORSHAM WELL FIELD (TYPICAL – x5)

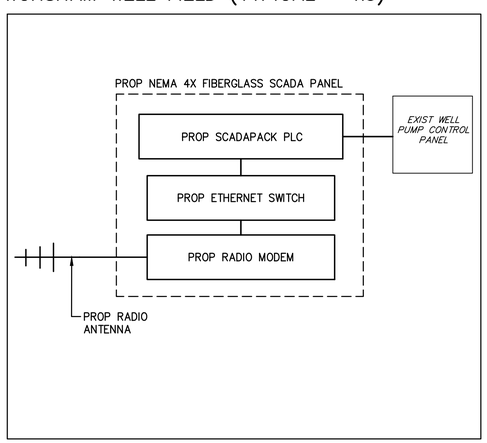


## WARD WELL FIELD WELL SITES (TYPICAL – x7)

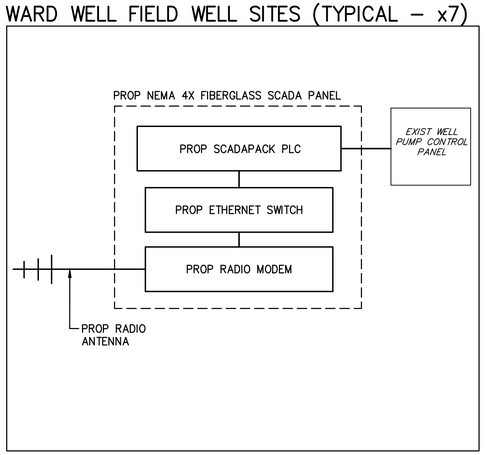


## NETWORK ARCHITECTURE DIAGRAM (CONT'D)

NOT TO SCALE


BAIRD GILROY & DIXON
ELECTRICAL ENGINEERS
9711 S. Mason Rd.
Ste. 125, #326
Richmond, TX 77407
(281) 529-5005
www.bgdeng.com
TBPE No. F-16575
Job No. 115-0030


| NO. | REVISION | DATE |
|---|---|---|
| | | |

STATE OF TEXAS — JOHN W. GILROY, JR. — 112871 — LICENSED PROFESSIONAL ENGINEER


ENPROTEC/HIBBS & TODD, INC.
ENVIRONMENTAL AND CIVIL ENGINEERING
402 Cedar Street
325-698-5560
Abilene, Texas 79601
PE Firm Registration No. 1151
PG Firm Registration No. 50103
RPLS Firm Registration No. 10011900


BAR IS ONE INCH ON ORIGINAL DRAWING
0 1
IF NOT ONE INCH ON THIS SHEET, ADJUST SCALES ACCORDINGLY.

| | |
|---|---|
| DESIGNED BY JWG | SCALE AS NOTED |
| DRAWN BY JWG | DATE 7/3/2020 |
| CHECKED BY JAD | |

TOWN OF PECOS CITY TEXAS
SCADA IMPROVEMENTS

**NETWORK ARCHITECTURE DIAGRAM SHEET 2**

PROJECT NO.: 19-7469
SEQUENCE No. 10 OF 28
SHEET No. E5

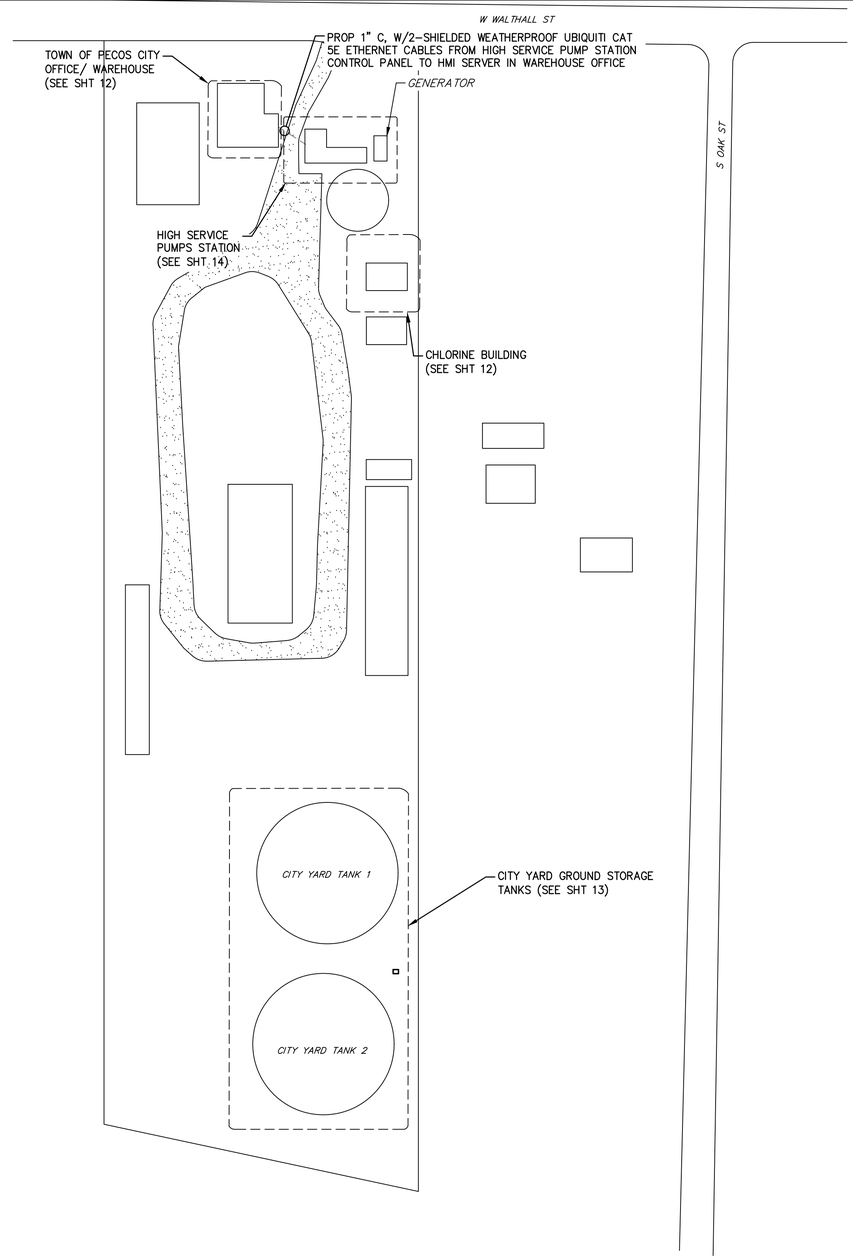


**CITY YARD WIRELESS RADIOS & ANTENNA MOUNTING**

| SITE | SITE MARKER | AREA | COORDINATES | STATION NAME | ACCESS POINT | ANTENNA HEIGHT | ANTENNA MOUNTING | RADIO | ANTENNA | GAIN |
|---|---|---|---|---|---|---|---|---|---|---|
| CITY YARD TANKS | 27 | TOWN OF PECOS | 31°24'39.97"N 103°29'29.60"W | CITY YARD TANKS | CITY YARD PUMP STATION | 30' | ON TANK | UBIQUITI POWERBEAM 5AC GEN2 | PROVIDE W/PBE-RAD-400 | 25 dBi |
| CITY YARD PUMP STATION | 28 | TOWN OF PECOS | 31°24'47.80"N 103°29'27.69"W | CITY YARD PS - ACCESS POINT | - | 60' | PROP 60' TOWER | UBIQUITI ROCKET 5AC PRISM GEN 2 | UBIQUITI AMO-5G13 | 13 dBi OMNI |
| CITY YARD PUMP STATION | 28 | TOWN OF PECOS | 31°24'47.80"N 103°29'27.69"W | CITY YARD PS - STATION | AIRPORT TANK | 60' | | UBIQUITI POWERBEAM 5AC GEN2 | PROVIDE W/PBE-RAD-400 | 25 dBi |
| CITY YARD CHLORINE BUILDING | 27A | TOWN OF PECOS | 31°24'47.80"N 103°29'27.69"W | CITY YARD CHLORINE BUILDING | CITY YARD PUMP STATION | 10' | ON BLDG | UBIQUITI POWERBEAM 5AC GEN2 | PROVIDE W/PBE-RAD-400 | 25 dBi |


BAIRD GILROY & DIXON
ELECTRICAL ENGINEERS
9711 S. Mason Rd.
Ste. 125, #326
Richmond, TX 77407
(281) 529-5005
www.bgdeng.com
TBPE No. F-16575
Job No. 115-0030


| NO. | REVISION | DATE |
|---|---|---|
| | | |

7/6/20

STATE OF TEXAS
JOHN W. GILROY, JR.
112871
LICENSED
PROFESSIONAL ENGINEER


ENPROTEC/HIBBS & TODD, INC.
ENVIRONMENTAL AND CIVIL ENGINEERING
402 Cedar Street
Abilene, Texas 79601
325-698-5560
PE Firm Registration No. 1151
PG Firm Registration No. 50103
RPLS Firm Registration No. 10011900


BAR IS ONE INCH ON ORIGINAL DRAWING
0 1
IF NOT ONE INCH ON THIS SHEET, ADJUST SCALES ACCORDINGLY.

| | |
|---|---|
| DESIGNED BY JWG | SCALE AS NOTED |
| DRAWN BY JWG | DATE 7/3/2020 |
| CHECKED BY JAD | |

**TOWN OF PECOS CITY TEXAS**
**SCADA IMPROVEMENTS**

**CITY YARD SITE PLAN**

PROJECT NO.: **19-7469**
SEQUENCE No. **11 OF 28**
SHEET No. **E6**

NOTES:

1. REFER TO NETWORK ARCHITECTURE DIAGRAM FOR EQUIPMENT LIST AND INTERCONNECTION INFORMATION.
2. INSTALL NEW SCADA PANEL AT CHLORINE BUILDING WITH SCADAPACK PLC, ETHERNET SWITCH, AND UPS. INSTALL NEW UBIQUITI RADIO ANTENNA TO ESTABLISH COMMUNICATION WITH MASTER STATION. ROUTE SIGNALS SHOWN ON I/O LIST TO PANEL IN SCHEDULE 80 PVC CONDUIT.
3. PROVIDE 3M UNDER-DESK CPU HOLDERS WITH 360° SWIVEL FOR CPU TOWER AND UPS.
4. MOUNT CELLULAR ANTENNA HIGH ON EXTERIOR WALL.

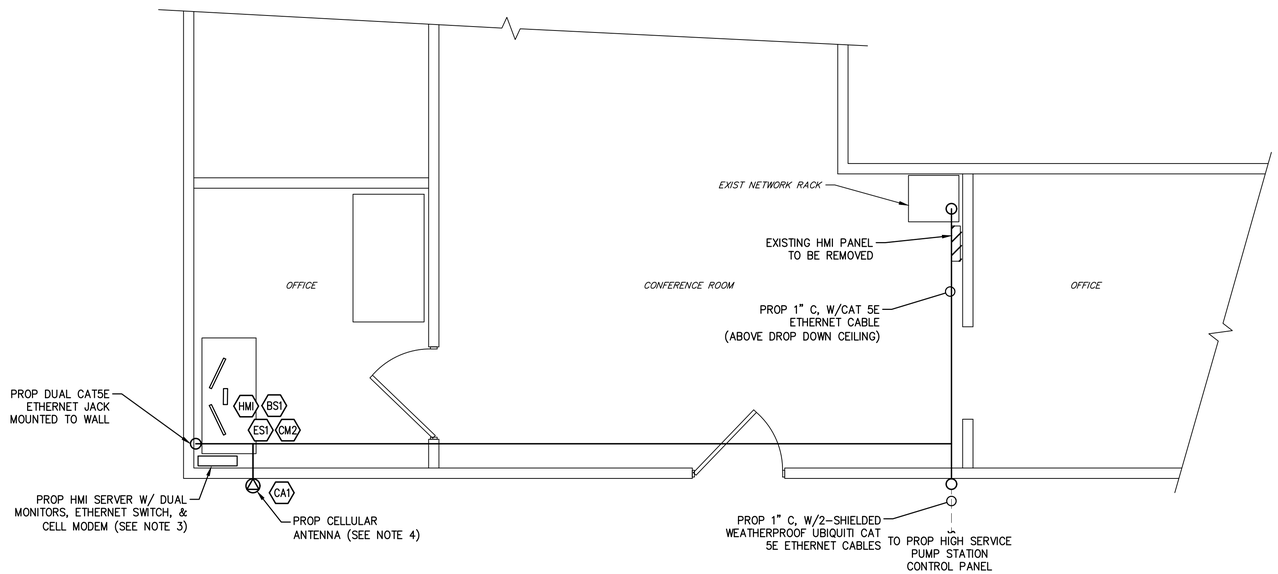


## CITY YARD OFFICE PLAN

NOT TO SCALE

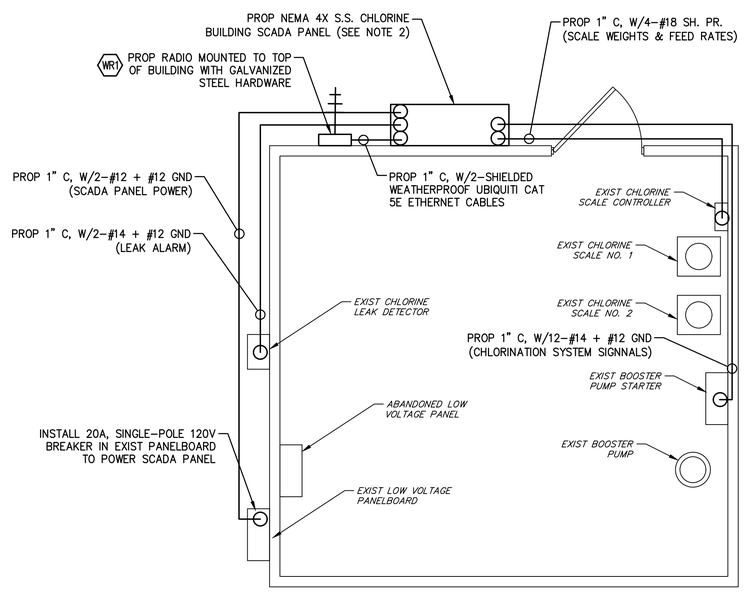


## CITY YARD CHLORINE BUILDING PLAN

NOT TO SCALE

### CITY YARD CHLORINE BUILDING SCADA PANEL I/O

| | |
|---|---|
| **DIGITAL INPUTS** | |
| DI-1 | CHLORINE BOOSTER PUMP RUNNING |
| DI-2 | CHLORINE BOOSTER PUMP HOA IN AUTO |
| DI-3 | CHLORINE BOOSTER PUMP HOA IN HAND |
| DI-4 | CHLORINE BOOSTER PUMP OVERLOAD |
| DI-5 | CHLORINE LEAK ALARM |
| DI-6 | CHLORINE VALVE OPENED |
| DI-7 | CHLORINE VALVE CLOSED |
| DI-8 | UPS ALARM |
| DI-9 | SPARE |
| DI-10 | SPARE |
| DI-11 | SPARE |
| DI-12 | SPARE |
| DI-13 | SPARE |
| DI-14 | SPARE |
| DI-15 | SPARE |
| DI-16 | SPARE |
| DI-17 | SPARE |
| DI-18 | SPARE |
| **DIGITAL OUTPUTS** | |
| DO-1 | CHLORINE BOOSTER PUMP CALL |
| DO-2 | SPARE |
| DO-3 | SPARE |
| DO-4 | SPARE |
| DO-5 | SPARE |
| DO-6 | SPARE |
| DO-7 | SPARE |
| DO-8 | SPARE |
| DO-9 | SPARE |
| DO-10 | SPARE |
| **ANALOG INPUTS** | |
| AI-1 | CHLORINE SCALE NO. 1 |
| AI-2 | CHLORINE SCALE NO. 2 |
| AI-3 | CHLORINE SCALE NO. 1 FEED RATE |
| AI-4 | CHLORINE SCALE NO. 2 FEED RATE |
| AI-5 | FUTURE CHLORINE ANALYZER |
| AI-6 | SPARE |
| **ANALOG OUTPUTS** | |
| AO-1 | CHLORINE DOSAGE RATE (FUTURE) |
| AO-2 | SPARE |


BAIRD GILROY & DIXON ELECTRICAL ENGINEERS
9711 S. Mason Rd.
Ste. 125, #326
Richmond, TX 77407
(281) 529-5005
www.bgdeng.com
TBPE No. F-16575
Job No. 115-0030


| NO. | REVISION | DATE |
|---|---|---|
| | | |

7/6/20

STATE OF TEXAS
JOHN W. GILROY, JR.
112871
LICENSED
PROFESSIONAL ENGINEER


ENPROTEC/HIBBS & TODD, INC.
ENVIRONMENTAL AND CIVIL ENGINEERING
402 Cedar Street
Abilene, Texas 79601
325-698-5560
PE Firm Registration No. 1151
PG Firm Registration No. 50103
RPLS Firm Registration No. 10011900


BAR IS ONE INCH ON ORIGINAL DRAWING
0 1
IF NOT ONE INCH ON THIS SHEET, ADJUST SCALES ACCORDINGLY.

| | |
|---|---|
| DESIGNED BY JWG | SCALE AS NOTED |
| DRAWN BY JWG | DATE 7/3/2020 |
| CHECKED BY JAD | |

TOWN OF PECOS CITY TEXAS
SCADA IMPROVEMENTS

CITY YARD OFFICE & CHLORINE BUILDING PLANS

PROJECT NO.: 19-7469

SEQUENCE No. 12 OF 28

SHEET No. E7

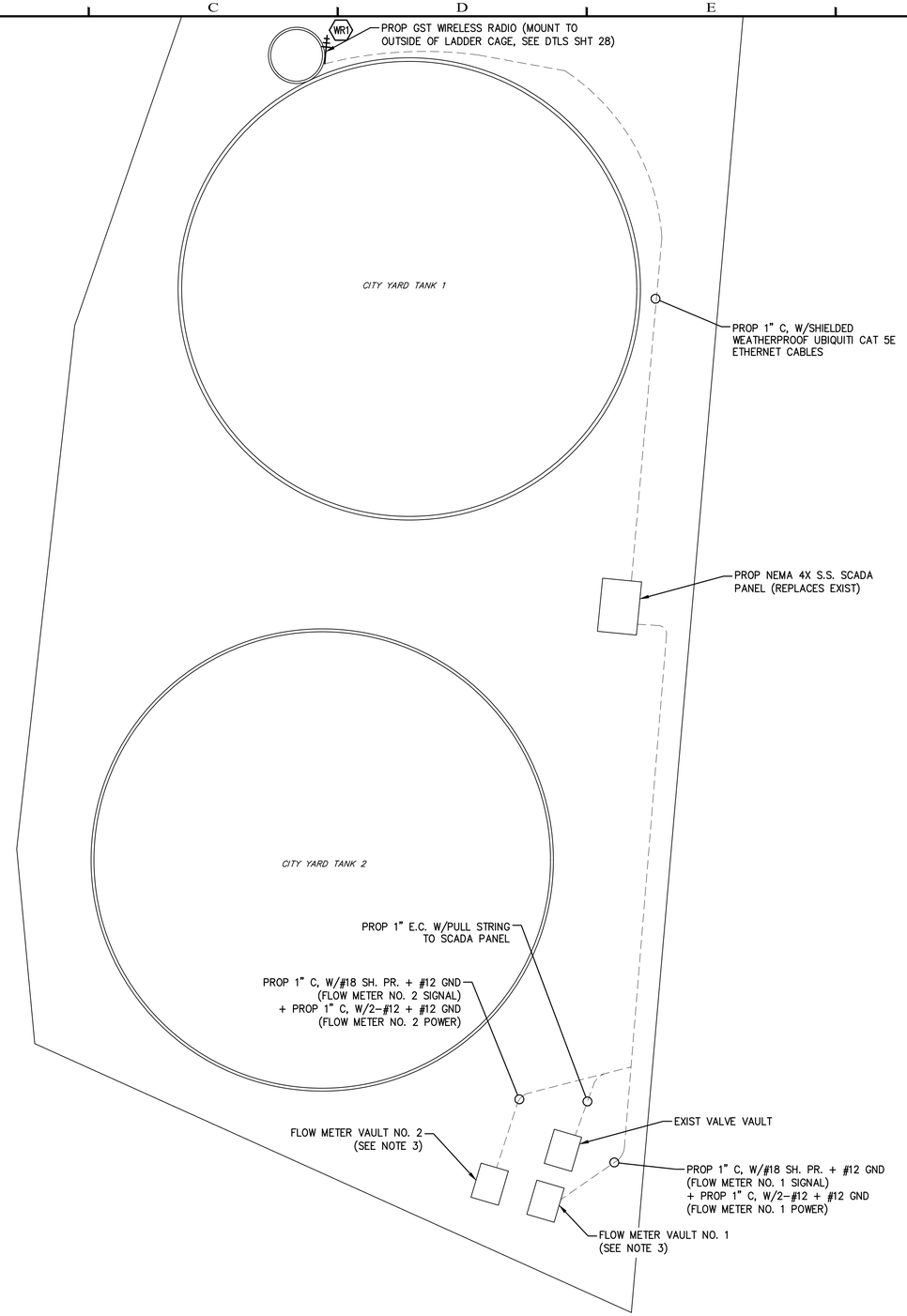


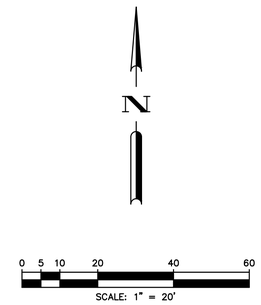


NOTES:

1. REFER TO NETWORK ARCHITECTURE DIAGRAM FOR EQUIPMENT LIST AND INTERCONNECTION INFORMATION.
2. REPLACE EXIST GROUND STORAGE TANK SCADA PANEL WITH PROPOSED NEMA 4X STAINLESS STEEL SCADA PANEL. TAG ALL I/O PRIOR TO REMOVAL AND REPLICATE CONNECTION POINTS AT PROPOSED PLC. PROIVDE I/O TAGS TO ENGINEER. ROUTE ETHERNET CABLE FROM PLC TO PROPOSED ETHERNET SWTICH.
3. INSTALL 4-20mA TRANSMITTERS FOR EXISTING FLOW METER NOS. 1 & 2 PROPELLER METERS.
4. INSTALL GST WIRELESS RADIO TO OUTSIDE OF EXISTING LADDER CAGE. HARDWARE SHALL NOT INTERFERE WITH MOVEMENT THROUGH CAGE.

## CITY YARD GROUND STORAGE TANKS SCADA PANEL I/O

| | |
|---|---|
| **DIGITAL INPUTS** | |
| DI-1 | FLOW CONTROL VALVE OPENED |
| DI-2 | FLOW CONTROL VALVE CLOSED |
| DI-3 | UPS ALARM |
| DI-4 | SPARE |
| DI-5 | SPARE |
| DI-6 | SPARE |
| DI-7 | SPARE |
| DI-8 | SPARE |
| DI-9 | SPARE |
| DI-10 | SPARE |
| DI-11 | SPARE |
| DI-12 | SPARE |
| DI-13 | SPARE |
| DI-14 | SPARE |
| DI-15 | SPARE |
| DI-16 | SPARE |
| DI-17 | SPARE |
| DI-18 | SPARE |
| **DIGITAL OUTPUTS** | |
| DO-1 | FLOW CONTROL VALVE OPEN |
| DO-2 | FLOW CONTROL VAVLE CLOSE |
| DO-3 | SPARE |
| DO-4 | SPARE |
| DO-5 | SPARE |
| DO-6 | SPARE |
| DO-7 | SPARE |
| DO-8 | SPARE |
| DO-9 | SPARE |
| DO-10 | SPARE |
| **ANALOG INPUTS** | |
| AI-1 | GST NO. 1 LEVEL |
| AI-2 | GST NO. 2 LEVEL |
| AI-3 | INFLUENT FLOW METER NO. 1 |
| AI-4 | INFLUENT FLOW METER NO. 2 |
| AI-5 | FUTURE GST NO. 1 CHLORINE ANALYZER |
| AI-6 | FUTURE GST NO. 2 CHLORINE ANALYZER |
| **ANALOG OUTPUTS** | |
| AO-1 | SPARE |
| AO-2 | SPARE |

BAIRD GILROY & DIXON
ELECTRICAL ENGINEERS
9711 S. Mason Rd.
Ste. 125, #326
Richmond, TX 77407
(281) 529-5005
www.bgdeng.com
TBPE No. F-16575
Job No. 115-0030

| NO. | REVISION | DATE |
|---|---|---|
| | | |

7/6/20

STATE OF TEXAS
JOHN W. GILROY, JR.
112871
LICENSED PROFESSIONAL ENGINEER

ENPROTEC/HIBBS & TODD, INC.
ENVIRONMENTAL AND CIVIL ENGINEERING
402 Cedar Street
325-698-5560
Abilene, Texas 79601
PE Firm Registration No. 1151
PG Firm Registration No. 50103
RPLS Firm Registration No. 10011900

BAR IS ONE INCH ON ORIGINAL DRAWING
0 1
IF NOT ONE INCH ON THIS SHEET. ADJUST SCALES ACCORDINGLY.

| | |
|---|---|
| DESIGNED BY JWG | SCALE AS NOTED |
| DRAWN BY JWG | DATE 7/3/2020 |
| CHECKED BY JAD | |

**TOWN OF PECOS CITY TEXAS**
**SCADA IMPROVEMENTS**

**CITY YARD GROUND STORAGE TANKS PLAN**

PROJECT NO.: **19-7469**
SEQUENCE No. **13 OF 28**
SHEET No. **E8**

## CITY YARD HIGH SERVICE PUMP STATION SCADA PANEL I/O

| | | | |
|---|---|---|---|
| **DIGITAL INPUTS** | | **DIGITAL OUTPUTS** | |
| DI-1 | HIGH SERVICE PUMP NO. 1 RUNNING | DO-1 | HIGH SERVICE PUMP NO. 1 CALL |
| DI-2 | HIGH SERVICE PUMP NO. 1 HOA IN AUTO | DO-2 | HIGH SERVICE PUMP NO. 2 CALL |
| DI-3 | HIGH SERVICE PUMP NO. 1 HOA IN HAND | DO-3 | HIGH SERVICE PUMP NO. 3 CALL |
| DI-4 | HIGH SERVICE PUMP NO. 1 OVERLOAD | DO-4 | HIGH SERVICE PUMP NO. 4 CALL |
| DI-5 | HIGH SERVICE PUMP NO. 2 RUNNING | DO-5 | HIGH SERVICE PUMP NO. 5 CALL |
| DI-6 | HIGH SERVICE PUMP NO. 2 HOA IN AUTO | DO-6 | HIGH SERVICE PUMP NO. 6 CALL |
| DI-7 | HIGH SERVICE PUMP NO. 2 HOA IN HAND | DO-7 | CONTROL VALVE OPEN |
| DI-8 | HIGH SERVICE PUMP NO. 2 OVERLOAD | DO-8 | CONTROL VALVE CLOSE |
| DI-9 | HIGH SERVICE PUMP NO. 3 RUNNING | DO-9 | ALARM RESET |
| DI-10 | HIGH SERVICE PUMP NO. 3 HOA IN AUTO | DO-10 | SPARE |
| DI-11 | HIGH SERVICE PUMP NO. 3 HOA IN HAND | **DIGITAL OUTPUTS (EXPANSION MODULE)** | |
| DI-12 | HIGH SERVICE PUMP NO. 3 OVERLOAD | DO-11 | SPARE |
| DI-13 | HIGH SERVICE PUMP NO. 4 RUNNING | DO-12 | SPARE |
| DI-14 | HIGH SERVICE PUMP NO. 4 HOA IN AUTO | DO-13 | SPARE |
| DI-15 | HIGH SERVICE PUMP NO. 4 HOA IN HAND | DO-14 | SPARE |
| DI-16 | HIGH SERVICE PUMP NO. 4 OVERLOAD | DO-15 | SPARE |
| DI-17 | HIGH SERVICE PUMP NO. 5 RUNNING | DO-16 | SPARE |
| DI-18 | HIGH SERVICE PUMP NO. 5 HOA IN AUTO | DO-17 | SPARE |
| **DIGITAL INPUTS (EXPANSION MODULE)** | | DO-18 | SPARE |
| DI-19 | HIGH SERVICE PUMP NO. 5 HOA IN HAND | DO-19 | SPARE |
| DI-20 | HIGH SERVICE PUMP NO. 5 OVERLOAD | DO-20 | SPARE |
| DI-21 | HIGH SERVICE PUMP NO. 6 RUNNING | DO-21 | SPARE |
| DI-22 | HIGH SERVICE PUMP NO. 6 HOA IN AUTO | DO-22 | SPARE |
| DI-23 | HIGH SERVICE PUMP NO. 6 HOA IN HAND | DO-23 | SPARE |
| DI-24 | HIGH SERVICE PUMP NO. 6 OVERLOAD | DO-24 | SPARE |
| DI-25 | ATS IN NORMAL POSITION | DO-25 | SPARE |
| DI-26 | ATS IN EMERGENCY POSITION | DO-26 | SPARE |
| DI-27 | GENERATOR RUNNING | DO-27 | SPARE |
| DI-28 | GENERATOR ALARM | DO-28 | SPARE |
| DI-29 | GENERATOR LOW FUEL | DO-29 | SPARE |
| DI-30 | CONTROL VALVE OPENED | DO-30 | SPARE |
| DI-31 | CONTROL VALVE CLOSED | DO-31 | SPARE |
| DI-32 | LOW PRESSURE SWITCH | DO-32 | SPARE |
| DI-33 | CONTROL SELECTOR SWITCH: SCADA | DO-33 | SPARE |
| DI-34 | CONTROL SELECTOR SWITCH: BACKUP | DO-34 | SPARE |
| DI-35 | BACKUP CONTROL | DO-35 | SPARE |
| DI-36 | PHASE FAILURE ALARM | DO-36 | SPARE |
| DI-37 | UPS ALARM | DO-37 | SPARE |
| DI-38 | SPARE | DO-38 | SPARE |
| DI-39 | SPARE | DO-39 | SPARE |
| DI-40 | SPARE | DO-40 | SPARE |
| DI-41 | SPARE | DO-41 | SPARE |
| DI-42 | SPARE | DO-42 | SPARE |
| DI-43 | SPARE | **ANALOG INPUTS** | |
| DI-44 | SPARE | AI-1 | EAST DIST LINE FLOW METER |
| DI-45 | SPARE | AI-2 | WEST DIST LINE FLOW METER |
| DI-46 | SPARE | AI-3 | EAST DIST LINE PRESSURE |
| DI-47 | SPARE | AI-4 | WEST DIST LINE PRESSURE |
| DI-48 | SPARE | AI-5 | SPARE |
| DI-49 | SPARE | AI-6 | SPARE |
| DI-50 | SPARE | **ANALOG INPUTS (EXPANSION MODULE)** | |
| **DIGITAL INPUTS (EXPANSION MODULE)** | | AI-7 | SPARE |
| DI-51 | SPARE | AI-8 | SPARE |
| DI-52 | SPARE | AI-9 | SPARE |
| DI-53 | SPARE | AI-10 | SPARE |
| DI-54 | SPARE | AI-11 | SPARE |
| DI-55 | SPARE | AI-12 | SPARE |
| DI-56 | SPARE | AI-13 | SPARE |
| DI-57 | SPARE | AI-14 | SPARE |
| DI-58 | SPARE | **ANALOG OUTPUTS** | |
| DI-59 | SPARE | AO-1 | SPARE |
| DI-60 | SPARE | AO-2 | SPARE |
| DI-61 | SPARE | **ANALOG OUTPUTS (EXPANSION MODULE)** | |
| DI-62 | SPARE | AO-3 | SPARE |
| DI-63 | SPARE | AO-5 | SPARE |
| DI-64 | SPARE | AO-6 | SPARE |
| DI-65 | SPARE | AO-7 | SPARE |
| DI-66 | SPARE | | |
| DI-67 | SPARE | | |
| DI-68 | SPARE | | |
| DI-69 | SPARE | | |
| DI-70 | SPARE | | |
| DI-71 | SPARE | | |
| DI-72 | SPARE | | |
| DI-73 | SPARE | | |
| DI-74 | SPARE | | |
| DI-75 | SPARE | | |
| DI-76 | SPARE | | |
| DI-77 | SPARE | | |
| DI-78 | SPARE | | |
| DI-79 | SPARE | | |
| DI-80 | SPARE | | |
| DI-81 | SPARE | | |
| DI-82 | SPARE | | |

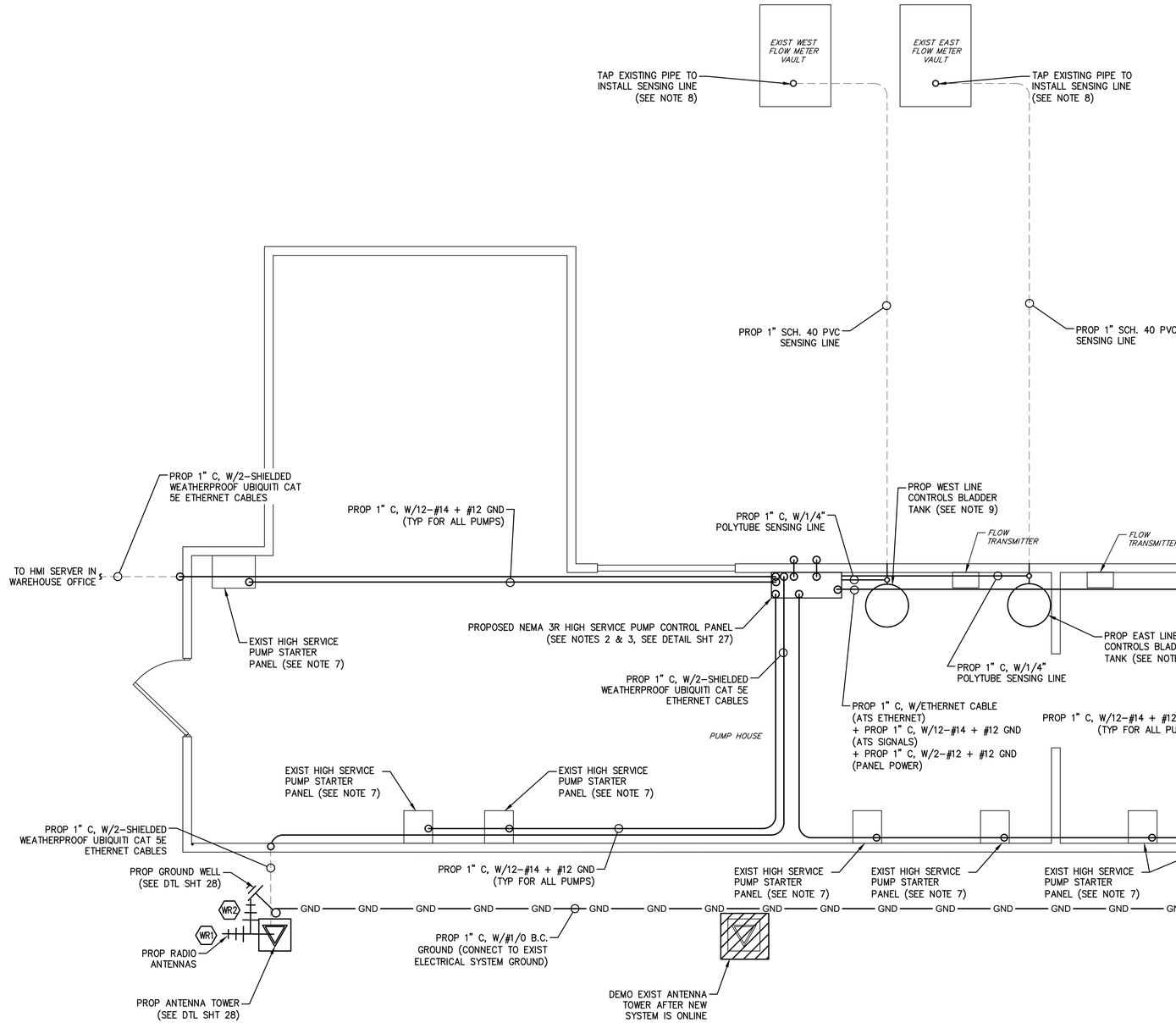


NOTES:

1. REFER TO NETWORK ARCHITECTURE DIAGRAM FOR EQUIPMENT LIST AND INTERCONNECTION INFORMATION.
2. REPLACE EXISTING SCADA PANEL IN PLACE WITH PROPOSED HIGH SERVICE PUMP STATION CONTROL PANEL. TAG I/O PRIOR TO REMOVAL AND REROUTE ALL I/O POINTS TO PROPOSED CONTROL PANEL. PROVIDE I/O TAGS TO ENGINEER. EXTEND EXISTING CONDUITS AS NECESSARY. POWER PANEL FROM EXISTING LOW VOLTAGE PANEL. INSTALL 120V, SINGLE-POLE BREAKER IN EXISTING LOW VOLTAGE PANEL.
3. TEMPORARILY RELOCATE EXISTING SCADA PANEL TO OPERATE PUMP STATION WHILE NEW PANEL IS BEING INSTALLED. PROVIDE TEMPORARY WIRE AS REQUIRED.
4. REPLACE EXISTING RADIO WITH UBIQUITI RADIO. ROUTE ETHERNET CABLE FROM INTERNAL RADIO MODEM TO PROPOSED ETHERNET SWITCH.
5. INSTALL MODBUS TCP/IP GATEWAYS IN EXISTING GE ZENITH ZTG TRANSFER SWITCH AND AKSA GENERATOR WITH DEEP SEA ELECTRONICS DSE 7320 MKII CONTROLLER.
6. INSTALL 120V SINGLE POLE BREAKER TO POWER PROPOSED HSP PANEL.
7. REMOVE HOA SWITCHES FROM EXISTING HSP STARTER PANELS. HOA SWITCHES FOR HIGH SERVICE PUMPS WILL BE LOCATED AT PROPOSED HIGH SERVICE PUMP STATION CONTROL PANEL. REWIRE STARTER RUN CIRCUITS TO ACCEPT CALL SIGNALS FROM PROPOSED PANEL. COVER PENETRATIONS WITH METAL PLATE PAINTED TO MATCH EXISTING PANEL COLOR.
8. TAP EXISTING EAST AND WEST DISTRIBUTION PIPING FOR PROPOSED SYSTEM PRESSURE SENSING LINE. INSTALL VALVES AT TAP TO ISOLATE EACH LINE.
9. INSTALL BLADDER TANK FOR EACH SENSING LINE TO PROTECT CONTROLS FROM RAPID PRESSURE CHANGES ON PUMP OPERATION.

HIGH SERVICE PUMP STATION ENLARGED SITE PLAN

NOT TO SCALE


BAIRD GILROY & DIXON ELECTRICAL ENGINEERS
9711 S. Mason Rd.
Ste. 125, #326
Richmond, TX 77407
(281) 529-5005
www.bgdeng.com
TBPE No. F-16575
Job No. 115-0030


| NO. | REVISION | DATE |
|---|---|---|
| | | |

7/6/20

STATE OF TEXAS — JOHN W. GILROY, JR. — 112871 — LICENSED PROFESSIONAL ENGINEER


ENPROTEC/HIBBS & TODD, INC.
ENVIRONMENTAL AND CIVIL ENGINEERING
402 Cedar Street
Abilene, Texas 79601
325-698-5560
PE Firm Registration No. 1151
PG Firm Registration No. 50103
RPLS Firm Registration No. 10011900


BAR IS ONE INCH ON ORIGINAL DRAWING
0 1
IF NOT ONE INCH ON THIS SHEET, ADJUST SCALES ACCORDINGLY.

| | |
|---|---|
| DESIGNED BY JWG | SCALE AS NOTED |
| DRAWN BY JWG | DATE 7/3/2020 |
| CHECKED BY JAD | |

TOWN OF PECOS CITY TEXAS
SCADA IMPROVEMENTS

HIGH SERVICE PUMP STATION SITE PLAN

PROJECT NO.: 19-7469
SEQUENCE No. 14 OF 28
SHEET No. E9

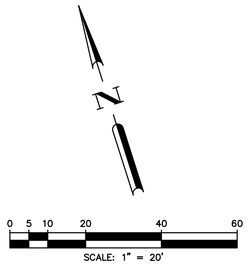


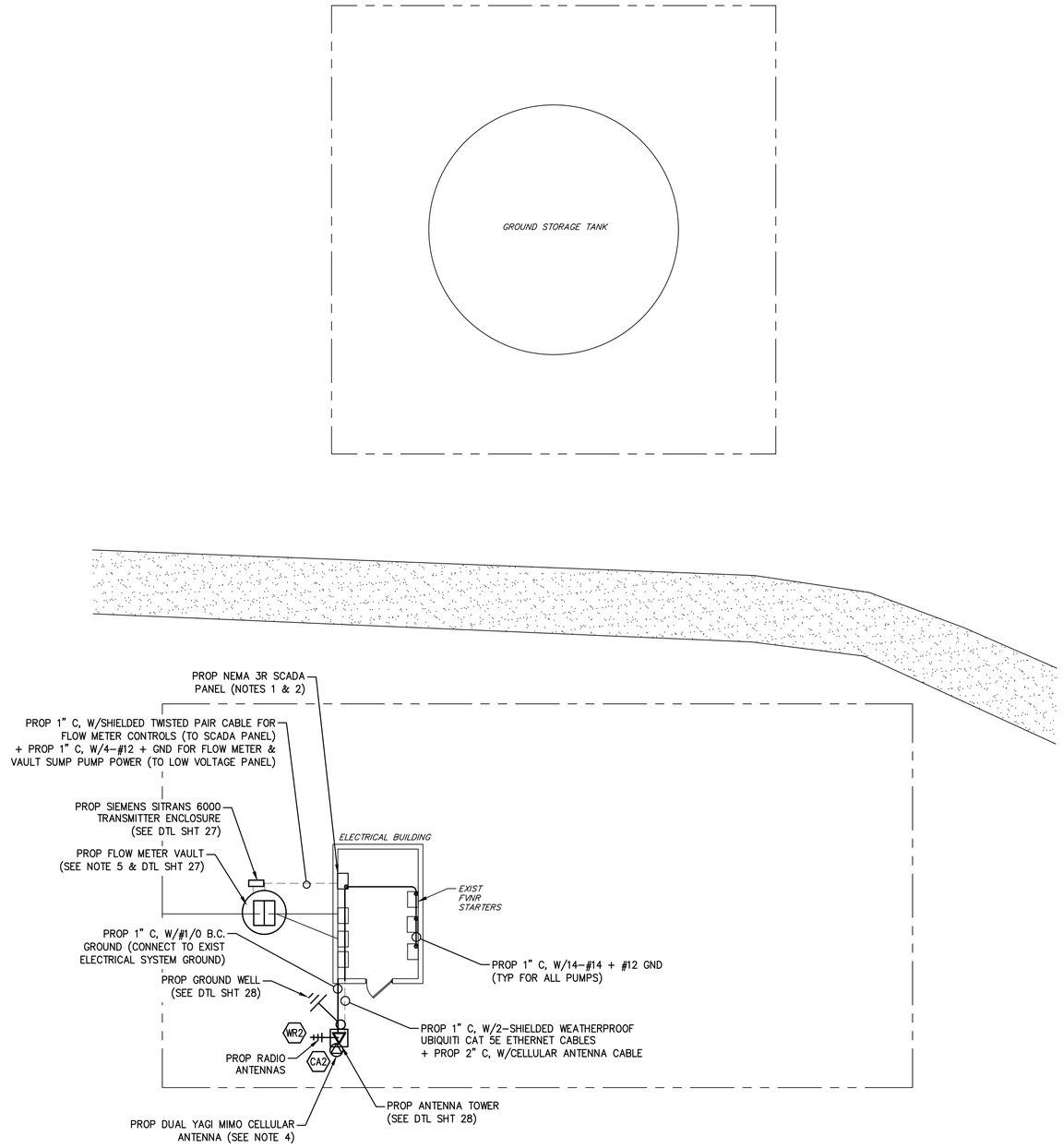


NOTES:

1. REFER TO NETWORK ARCHITECTURE DIAGRAM FOR EQUIPMENT LIST AND INTERCONNECTION INFORMATION.
2. REPLACE EXISTING SCADA PANEL. TAG ALL I/O PRIOR TO REMOVAL AND REPLICATE CONNECTION POINTS AT PROPOSED PLC. PROVIDE I/O TAGS TO ENGINEER. ROUTE ETHERNET CABLE FROM PLC TO PROPOSED ETHERNET SWITCH.
3. REPLACE EXISTING WIRELESS RADIO WITH UBIQUITI RADIO. ROUTE ETHERNET CABLE FROM RADIO TO PROPOSED ETHERNET SWITCH.
4. MOUNT CELLULAR DUAL YAGI MIMO ANTENNAS ON PROPOSED TOWER AND AIM AT CELLULAR TOWER.
5. POWER PROPOSED FLOW METER AND FLOW METER VAULT SUMP PUMP CIRCUIT FROM TWO (2) 20A/1P BREAKERS INSTALLED IN EXISTING PANELBOARD.

## WARD BOOSTER PUMP STATION SCADA PANEL I/O LIST

| DIGITAL INPUTS | | DIGITAL OUTPUTS (EXPANSION MODULE) | |
|---|---|---|---|
| DI-1 | PUMP NO. 1 RUNNING | DO-11 | SPARE |
| DI-2 | PUMP NO. 1 HOA IN AUTO | DO-12 | SPARE |
| DI-3 | PUMP NO. 1 HOA IN HAND | DO-13 | SPARE |
| DI-4 | PUMP NO. 1 OVERLOAD | DO-14 | SPARE |
| DI-5 | PUMP NO. 2 RUNNING | DO-15 | SPARE |
| DI-6 | PUMP NO. 2 HOA IN AUTO | DO-16 | SPARE |
| DI-7 | PUMP NO. 2 HOA IN HAND | DO-17 | SPARE |
| DI-8 | PUMP NO. 2 OVERLOAD | DO-18 | SPARE |
| DI-9 | PUMP NO. 3 RUNNING | DO-19 | SPARE |
| DI-10 | PUMP NO. 3 HOA IN AUTO | DO-20 | SPARE |
| DI-11 | PUMP NO. 3 HOA IN HAND | DO-21 | SPARE |
| DI-12 | PUMP NO. 3 OVERLOAD | DO-22 | SPARE |
| DI-13 | FLOW CONTROL VALVE OPENED | DO-23 | SPARE |
| DI-14 | FLOW CONTROL VALVE CLOSED | DO-24 | SPARE |
| DI-15 | PHASE FAILURE RELAY | DO-25 | SPARE |
| DI-16 | UPS ALARM | DO-26 | SPARE |
| DI-17 | SPARE | DO-27 | SPARE |
| DI-18 | SPARE | DO-28 | SPARE |
| **DIGITAL INPUTS (EXPANSION MODULE)** | | DO-29 | SPARE |
| DI-19 | SPARE | DO-30 | SPARE |
| DI-20 | SPARE | DO-31 | SPARE |
| DI-21 | SPARE | DO-32 | SPARE |
| DI-22 | SPARE | DO-33 | SPARE |
| DI-23 | SPARE | DO-34 | SPARE |
| DI-24 | SPARE | DO-35 | SPARE |
| DI-25 | SPARE | DO-36 | SPARE |
| DI-26 | SPARE | DO-37 | SPARE |
| DI-27 | SPARE | DO-38 | SPARE |
| DI-28 | SPARE | DO-39 | SPARE |
| DI-29 | SPARE | DO-40 | SPARE |
| DI-30 | SPARE | DO-41 | SPARE |
| DI-31 | SPARE | DO-42 | SPARE |
| DI-32 | SPARE | **ANALOG INPUTS** | |
| DI-33 | SPARE | AI-1 | FLOW METER |
| DI-34 | SPARE | AI-2 | GST LEVEL |
| DI-35 | SPARE | AI-3 | FLOW CONTROL VALVE POSITION |
| DI-36 | SPARE | AI-4 | SPARE |
| DI-37 | SPARE | AI-5 | SPARE |
| DI-38 | SPARE | AI-6 | SPARE |
| DI-39 | SPARE | **ANALOG INPUTS (EXPANSION MODULE)** | |
| DI-40 | SPARE | AI-7 | SPARE |
| DI-41 | SPARE | AI-8 | SPARE |
| DI-42 | SPARE | AI-9 | SPARE |
| DI-43 | SPARE | AI-10 | SPARE |
| DI-44 | SPARE | AI-11 | SPARE |
| DI-45 | SPARE | AI-12 | SPARE |
| DI-46 | SPARE | AI-13 | SPARE |
| DI-47 | SPARE | AI-14 | SPARE |
| DI-48 | SPARE | **ANALOG OUTPUTS** | |
| DI-49 | SPARE | AO-1 | FLOW CONTROL VALVE POSITION SIGNAL |
| DI-50 | SPARE | AO-2 | SPARE |
| **DIGITAL OUTPUTS** | | **ANALOG OUTPUTS (EXPANSION MODULE)** | |
| DO-1 | PUMP NO. 1 CALL | AO-3 | SPARE |
| DO-2 | PUMP NO. 2 CALL | AO-5 | SPARE |
| DO-3 | PUMP NO. 3 CALL | AO-6 | SPARE |
| DO-4 | FLOW CONTROL VALVE OPEN | AO-7 | SPARE |
| DO-5 | FLOW CONTROL VALVE CLOSE | | |
| DO-6 | SPARE | | |
| DO-7 | SPARE | | |
| DO-8 | SPARE | | |
| DO-9 | SPARE | | |
| DO-10 | SPARE | | |

## WARD BOOSTER PUMP STATION WIRELESS RADIOS & ANTENNA MOUNTING

| SITE | SITE MARKER | AREA | COORDINATES | STATION NAME | ACCESS POINT | ANTENNA HEIGHT | ANTENNA MOUNTING | RADIO | ANTENNA | GAIN |
|---|---|---|---|---|---|---|---|---|---|---|
| WARD BOOSTER PUMP STATION | 25 | WARD BOOSTER PUMP STATION | 31°22'37.86"N 103°16'15.12"W | WARD PS STATION | BLENDING TANKS | 60' | | UBIQUITI ROCKET 5AC PRISM GEN 2 | UBIQUITI RD-5G31-AC | 31 dBi |


BAIRD GILROY & DIXON
ELECTRICAL ENGINEERS
9711 S. Mason Rd.
Ste. 125, #326
Richmond, TX 77407
(281) 529-5005
www.bgdeng.com
TBPE No. F-16575
Job No. 115-0030


| NO. | REVISION | DATE |
|---|---|---|
| | | |

7/6/20

STATE OF TEXAS
JOHN W. GILROY, JR.
112871
LICENSED
PROFESSIONAL ENGINEER


ENPROTEC/HIBBS & TODD, INC.
ENVIRONMENTAL AND CIVIL ENGINEERING
402 Cedar Street
Abilene, Texas 79601
325-698-5560
PE Firm Registration No. 1151
PG Firm Registration No. 50103
RPLS Firm Registration No. 10011900


BAR IS ONE INCH ON ORIGINAL DRAWING
0 1
IF NOT ONE INCH ON THIS SHEET, ADJUST SCALES ACCORDINGLY.

| | |
|---|---|
| DESIGNED BY JWG | SCALE AS NOTED |
| DRAWN BY JWG | DATE 7/3/2020 |
| CHECKED BY JAD | |

TOWN OF PECOS CITY TEXAS
SCADA IMPROVEMENTS

# WARD BOOSTER PUMP STATION SITE PLAN

PROJECT NO.: 19-7469

SEQUENCE No. 15 OF 28

SHEET No. E10

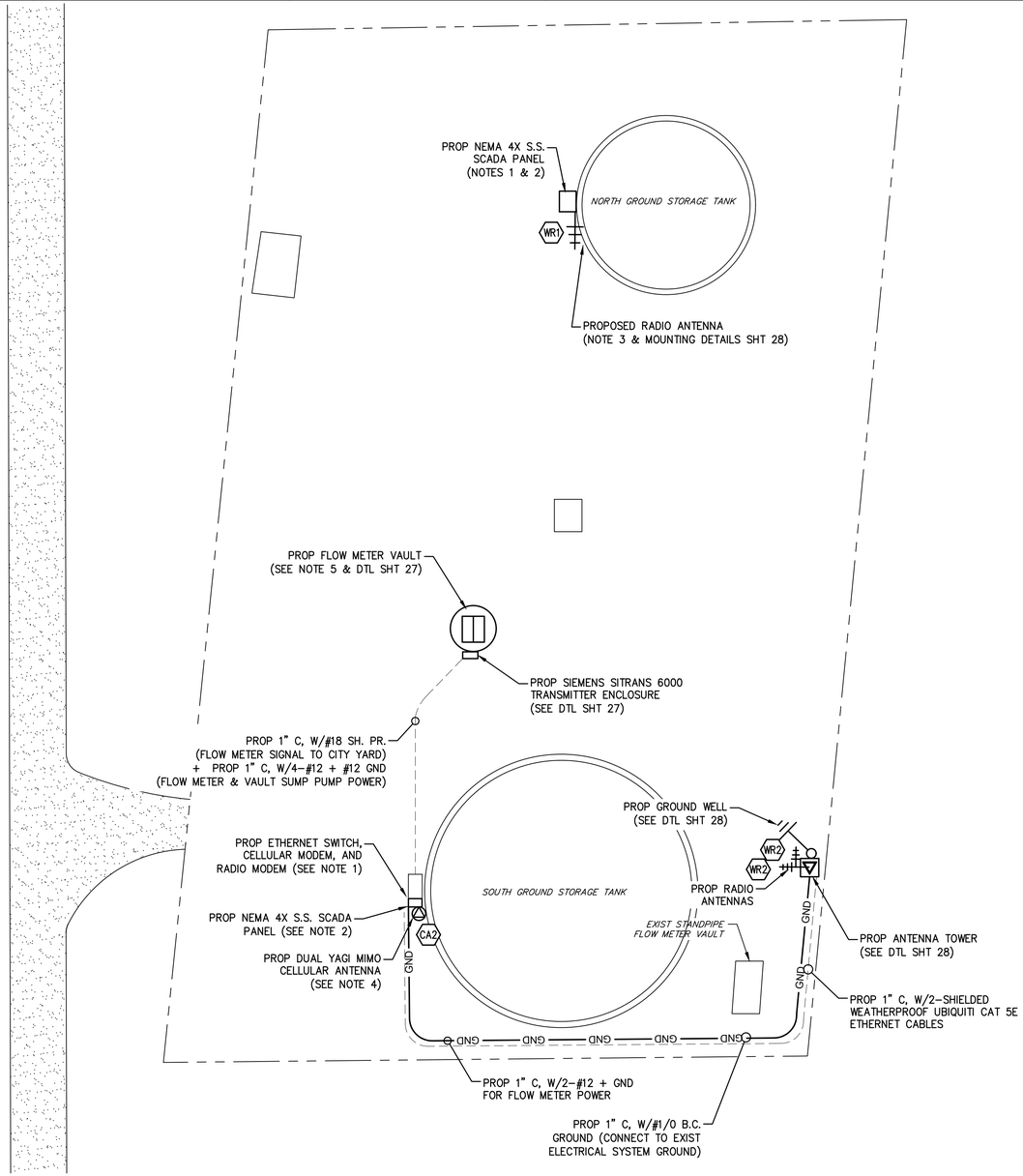


NOTES:

1. REFER TO NETWORK ARCHITECTURE DIAGRAM FOR EQUIPMENT LIST AND INTERCONNECTION INFORMATION.
2. REPLACE EXISTING SCADA PANEL. TAG ALL I/O PRIOR TO REMOVAL AND REPLICATE CONNECTION POINTS AT PROPOSED PLC. PROVIDE I/O TAGS TO ENGINEER. ROUTE ETHERNET CABLE FROM PLC TO PROPOSED ETHERNET SWITCH.
3. REPLACE EXISTING RADIO ANTENNA WITH UBIQUITI ANTENNA. ROUTE ETHERNET CABLE FROM INTERNAL RADIO MODEM TO PROPOSED ETHERNET SWITCH.
4. MOUNT DUAL YAGI MIMO CELLULAR ANTENNA ON GST AND AIM AT NEAREST CELLULAR TOWER. ROUTE ANTENNA CABLE IN 1" CONDUIT TO CELLULAR MODEM.
5. POWER PROPOSED FLOW METER AND FLOW METER VAULT SUMP PUMP CIRCUIT FROM TWO (2) 20A/1P BREAKERS INSTALLED IN EXISTING PANELBOARD.

## SOUTH BLENDING TANK GROUND STORAGE TANK SCADA PANAL I/O

| | |
|---|---|
| **DIGITAL INPUTS** | |
| DI-1 | UPS ALARM |
| DI-2 | FLOW CONTROL VALVE OPEN |
| DI-3 | FLOW CONTROL VALVE CLOSED |
| DI-4 | SPARE |
| DI-5 | SPARE |
| DI-6 | SPARE |
| DI-7 | SPARE |
| DI-8 | SPARE |
| DI-9 | SPARE |
| DI-10 | SPARE |
| DI-11 | SPARE |
| DI-12 | SPARE |
| DI-13 | SPARE |
| DI-14 | SPARE |
| DI-15 | SPARE |
| DI-16 | SPARE |
| DI-17 | SPARE |
| DI-18 | SPARE |
| **DIGITAL OUTPUTS** | |
| DO-1 | FLOW CONTROL VALVE OPEN |
| DO-2 | FLOW CONTROL VALVE CLOSE |
| DO-3 | SPARE |
| DO-4 | SPARE |
| DO-5 | SPARE |
| DO-6 | SPARE |
| DO-7 | SPARE |
| DO-8 | SPARE |
| DO-9 | SPARE |
| DO-10 | SPARE |
| **ANALOG INPUTS** | |
| AI-1 | GST LEVEL |
| AI-2 | STANDPIPES FLOW METER NO. 1 |
| AI-3 | STANDPIPES FLOW METER NO. 2 |
| AI-4 | CITY YARD FLOW METER |
| AI-5 | STANDPIPES FLOW CONTROL VALVE POSITION |
| AI-6 | SPARE |
| AI-7 | SPARE |
| AI-8 | SPARE |
| **ANALOG OUTPUTS** | |
| AO-1 | FLOW CONTROL VALVE POSITION SIGNAL |
| AO-2 | SPARE |

## NORTH BLENDING TANK GROUND STORAGE TANK SCADA PANAL I/O

| | |
|---|---|
| **DIGITAL INPUTS** | |
| DI-1 | UPS ALARM |
| DI-2 | SPARE |
| DI-3 | SPARE |
| DI-4 | SPARE |
| DI-5 | SPARE |
| DI-6 | SPARE |
| DI-7 | SPARE |
| DI-8 | SPARE |
| DI-9 | SPARE |
| DI-10 | SPARE |
| DI-11 | SPARE |
| DI-12 | SPARE |
| DI-13 | SPARE |
| DI-14 | SPARE |
| DI-15 | SPARE |
| DI-16 | SPARE |
| DI-17 | SPARE |
| DI-18 | SPARE |
| **DIGITAL OUTPUTS** | |
| DO-1 | SPARE |
| DO-2 | SPARE |
| DO-3 | SPARE |
| DO-4 | SPARE |
| DO-5 | SPARE |
| DO-6 | SPARE |
| DO-7 | SPARE |
| DO-8 | SPARE |
| DO-9 | SPARE |
| DO-10 | SPARE |
| **ANALOG INPUTS** | |
| AI-1 | GST LEVEL |
| AI-2 | SPARE |
| AI-3 | SPARE |
| AI-4 | SPARE |
| AI-5 | SPARE |
| AI-6 | SPARE |
| **ANALOG OUTPUTS** | |
| AO-1 | SPARE |
| AO-2 | SPARE |

## BLENDING TANKS WIRELESS RADIOS & ANTENNA MOUNTING

| SITE | SITE MARKER | COORDINATES | STATION NAME | AREA | ACCESS POINT | ANTENNA HEIGHT | ANTENNA MOUNTING | RADIO | ANTENNA | GAIN |
|---|---|---|---|---|---|---|---|---|---|---|
| SOUTH BLENDING TANK | 24 | 31°21'18.05"N 103°20'03.70"W | BLENDING TANKS ACCESS POINT | SOUTH BLENDING TANK | - | 60' | PROP 60' TOWER | UBIQUITI ROCKET 5AC PRISM GEN 2 | UBIQUITI AMO-5G13 | 13 dBi OMNI |
| SOUTH BLENDING TANK | 24 | 31°21'18.05"N 103°20'03.70"W | BLENDING TANKS STATION | SOUTH BLENDING TANK | STANDPIPES | 60' | | UBIQUITI ROCKET 5AC PRISM GEN 2 | UBIQUITI RD-5G31-AC | 31 dBi |
| NORTH BLENDING TANK | 24A | 31°21'18.05"N 103°20'03.70"W | NORTH BLENDING TANK | NORTH BLENDING TANK | BLENDING TANKS | 35' | ON TANK | UBIQUITI POWERBEAM 5AC GEN2 | PROVIDE W/PBE-RAD-400 | 25 dBi |

BAIRD GILROY & DIXON ELECTRICAL ENGINEERS
9711 S. Mason Rd.
Ste. 125, #326
Richmond, TX 77407
(281) 529-5005
www.bgdeng.com
TBPE No. F-16575
Job No. 115-0030

| NO. | REVISION | DATE |
|---|---|---|
| | | |

7/6/20

STATE OF TEXAS
JOHN W. GILROY, JR.
112871
LICENSED
PROFESSIONAL ENGINEER

ENPROTEC/HIBBS & TODD, INC.
ENVIRONMENTAL AND CIVIL ENGINEERING
402 Cedar Street
325-698-5560
Abilene, Texas 79601
PE Firm Registration No. 1151
PG Firm Registration No. 50103
RPLS Firm Registration No. 10011900

BAR IS ONE INCH ON ORIGINAL DRAWING
0 1
IF NOT ONE INCH ON THIS SHEET, ADJUST SCALES ACCORDINGLY.

| | |
|---|---|
| DESIGNED BY JWG | SCALE AS NOTED |
| DRAWN BY JWG | DATE 7/3/2020 |
| CHECKED BY JAD | |

TOWN OF PECOS CITY TEXAS
SCADA IMPROVEMENTS

BLENDING TANKS SITE PLAN

PROJECT NO.: 19-7469
SEQUENCE No. 16 OF 28
SHEET No. E11

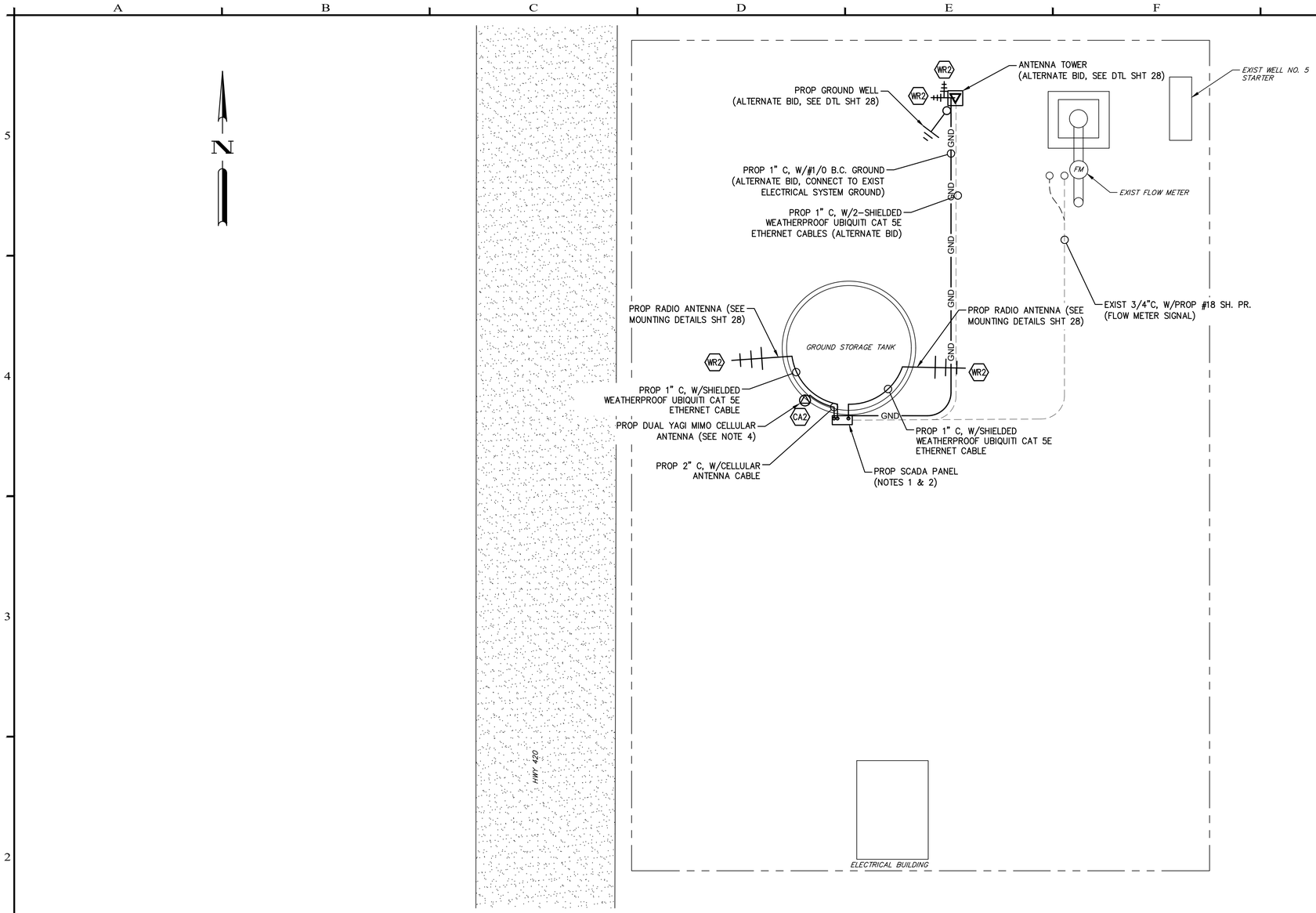


NOTES:

1. REFER TO NETWORK ARCHITECTURE DIAGRAM FOR EQUIPMENT LIST AND INTERCONNECTION INFORMATION.
2. REPLACE EXISTING SCADA PANEL. REPLACE EXISTING SCADAPACK PLC WITH SCADAPACK 32 PLC AND INSTALL NEW MODEM, ETHERNET SWITCH, AND UPS. TAG ALL I/O PRIOR TO REMOVAL AND REPLICATE CONNECTION POINTS AT PROPOSED PLC. PROVIDE I/O TAGS TO ENGINEER. ROUTE ETHERNET CABLE FROM PLC TO PROPOSED ETHERNET SWITCH.
3. REPLACE EXISTING RADIO ANTENNA WITH UBIQUITI ANTENNA. ROUTE ETHERNET CABLE FROM INTERNAL RADIO MODEM TO PROPOSED ETHERNET SWITCH.
4. MOUNT DUAL YAGI MIMO CELLULAR ANTENNA ON TANK AND AIM AT NEAREST CELLULAR TOWER. ROUTE ANTENNA CABLE IN 1" CONDUIT TO CELLULAR MODEM.
5. POWER FLOW METER FROM EXISTING LOW VOLTAGE PANEL. INSTALL 120V SINGLE POLE BREAKER IN PANEL.

## WARD TANK SCADA PANEL I/O

| | |
|---|---|
| **DIGITAL INPUTS** | |
| DI-1 | WARD WELL NO. 5 RUNNING |
| DI-2 | WARD WELL NO. 5 HOA IN AUTO |
| DI-3 | WARD WELL NO. 5 HOA IN HAND |
| DI-4 | WARD WELL NO. 5 OVERLOAD |
| DI-5 | WARD WELL NO. 5 PHASE FAILURE RELAY |
| DI-6 | FLOW CONTROL VALVE OPENED |
| DI-7 | FLOW CONTROL VALVE CLOSED |
| DI-8 | SPARE |
| DI-9 | SPARE |
| DI-10 | SPARE |
| DI-11 | SPARE |
| DI-12 | SPARE |
| DI-13 | SPARE |
| DI-14 | SPARE |
| DI-15 | SPARE |
| DI-16 | SPARE |
| DI-17 | SPARE |
| DI-18 | SPARE |
| **DIGITAL OUTPUTS** | |
| DO-1 | WELL NO. 5 CALL |
| DO-2 | FLOW CONTROL VALVE OPEN |
| DO-3 | FLOW CONTROL VALVE CLOSE |
| DO-4 | SPARE |
| DO-5 | SPARE |
| DO-6 | SPARE |
| DO-7 | SPARE |
| DO-8 | SPARE |
| DO-9 | SPARE |
| DO-10 | SPARE |
| **ANALOG INPUTS** | |
| AI-1 | WELL NO. 5 FLOW METER |
| AI-2 | TANK FLOW METER |
| AI-3 | MOTOR CT AMPERAGE |
| AI-4 | FLOW CONTROL VALVE POSITION |
| AI-5 | SPARE |
| AI-6 | SPARE |
| **ANALOG OUTPUTS** | |
| AO-1 | FLOW CONTROL VALVE POSITION SIGNAL |
| AO-2 | SPARE |

## WARD TANK RADIOS & ANTENNA MOUNTING

| SITE | SITE MARKER | AREA | COORDINATES | STATION NAME | ACCESS POINT | ANTENNA HEIGHT | ANTENNA MOUNTING | RADIO | ANTENNA | GAIN |
|---|---|---|---|---|---|---|---|---|---|---|
| WARD TANK | 34 | WARD COUNTY FIELD | 31°28'47.84"N 103°02'48.47"W | WARD TANK ACCESS POINT | - | 60' | EXIST TANK | UBIQUITI ROCKET 5AC PRISM GEN 2 | UBIQUITI AMO-5G13 | 13 dBi OMNI |
| WARD TANK | 34 | WARD COUNTY FIELD | 31°28'47.84"N 103°02'48.47"W | WARD TANK STATION | STANDPIPES | 60' | | UBIQUITI ROCKET 5AC PRISM GEN 2 | UBIQUITI RD-5G31-AC | 31 dBi |
| WARD TANK | 34 | WARD COUNTY FIELD | 31°28'47.84"N 103°02'48.47"W | WARD TANK ACCESS POINT | - | 100' | 100' TOWER (ALTERNATE BID) | UBIQUITI ROCKET 5AC PRISM GEN 2 | UBIQUITI AMO-5G13 | 13 dBi OMNI |
| WARD TANK | 34 | WARD COUNTY FIELD | 31°28'47.84"N 103°02'48.47"W | WARD TANK STATION | STANDPIPES | 100' | | UBIQUITI ROCKET 5AC PRISM GEN 2 | UBIQUITI RD-5G31-AC | 31 dBi |


BAIRD GILROY & DIXON
ELECTRICAL ENGINEERS
9711 S. Mason Rd.
Ste. 125, #326
Richmond, TX 77407
(281) 529-5005
www.bgdeng.com
TBPE No. F-16575
Job No. 115-0030


| NO. | REVISION | DATE |
|---|---|---|
| | | |

7/6/20

STATE OF TEXAS
JOHN W. GILROY, JR.
112871
LICENSED
PROFESSIONAL ENGINEER


ENPROTEC/HIBBS & TODD, INC.
ENVIRONMENTAL AND CIVIL ENGINEERING
402 Cedar Street
325-698-5560
Abilene, Texas 79601
PE Firm Registration No. 1151
PG Firm Registration No. 50103
RPLS Firm Registration No. 10011900


BAR IS ONE INCH ON ORIGINAL DRAWING
0 1
IF NOT ONE INCH ON THIS SHEET, ADJUST SCALES ACCORDINGLY.

| | |
|---|---|
| DESIGNED BY JWG | SCALE AS NOTED |
| DRAWN BY JWG | DATE 7/3/2020 |
| CHECKED BY JAD | |

TOWN OF PECOS CITY TEXAS
SCADA IMPROVEMENTS

WARD TANK SITE PLAN

PROJECT NO.: 19-7469

SEQUENCE No. 17 OF 28

SHEET No. E12

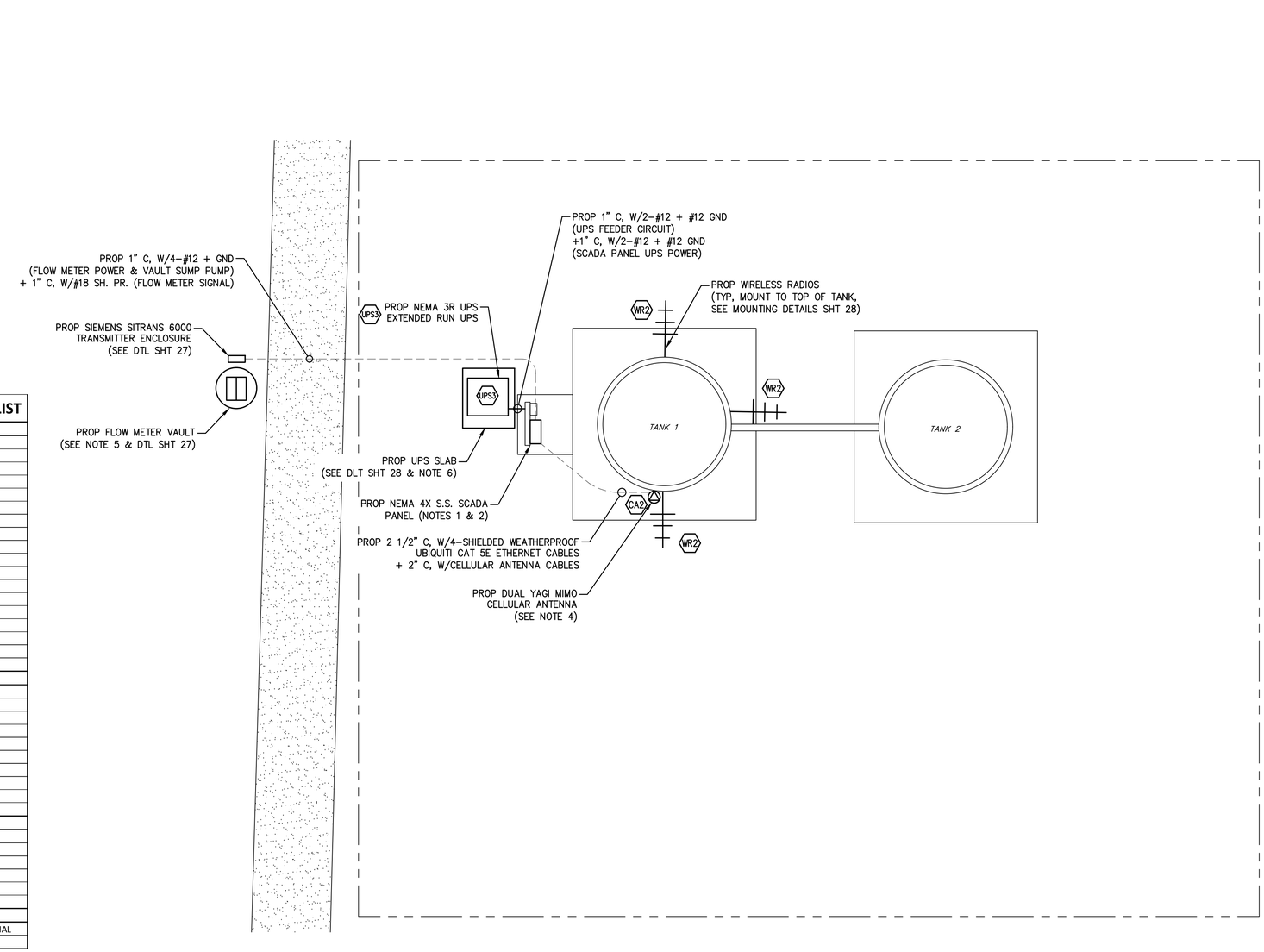


NOTES:

1. REFER TO NETWORK ARCHITECTURE DIAGRAM FOR EQUIPMENT LIST AND INTERCONNECTION INFORMATION.
2. REPLACE EXISTING SCADA PANEL. TAG ALL I/O PRIOR TO REMOVAL AND REPLICATE CONNECTION POINTS AT PROPOSED PLC. PROVIDE I/O TAGS TO ENGINEER. ROUTE ETHERNET CABLE FROM PLC TO PROPOSED ETHERNET SWITCH. MOUNT PROP PANEL TO EXISTING RACK, EXTEND RACK AS NECESSARY.
3. REPLACE EXISTING RADIO ANTENNA WITH UBIQUITI ANTENNA. ROUTE ETHERNET CABLE FROM INTERNAL RADIO MODEM TO PROPOSED ETHERNET SWITCH.
4. MOUNT DUAL YAGI MIMO CELLULAR ANTENNA ON TANK AND AIM AT NEAREST CELLULAR TOWER. ROUTE ANTENNA CABLE IN 1" CONDUIT TO CELLULAR MODEM.
5. POWER PROPOSED FLOW METER AND FLOW METER VAULT SUMP PUMP CIRCUIT FROM TWO (2) 20A/1P BREAKERS INSTALLED IN EXISTING PANELBOARD.
6. INSTALL CONCRETE SLAB WITH 6" HOUSEKEEPING FOR PROPOSED UPS ENCLOSURE.

## STANDPIPES SCADA PANEL I/O LIST

| | |
|---|---|
| **DIGITAL INPUTS** | |
| DI-1 | FLOW CONTROL VALVE OPENED |
| DI-2 | FLOW CONTROL VALVE CLOSED |
| DI-3 | SPARE |
| DI-4 | SPARE |
| DI-5 | SPARE |
| DI-6 | SPARE |
| DI-7 | SPARE |
| DI-8 | SPARE |
| DI-9 | SPARE |
| DI-10 | SPARE |
| DI-11 | SPARE |
| DI-12 | SPARE |
| DI-13 | SPARE |
| DI-14 | SPARE |
| DI-15 | SPARE |
| DI-16 | SPARE |
| DI-17 | SPARE |
| DI-18 | SPARE |
| **DIGITAL OUTPUTS** | |
| DO-1 | FLOW CONTROL OPEN |
| DO-2 | FLOW CONTROL CLOSE |
| DO-3 | SPARE |
| DO-4 | SPARE |
| DO-5 | SPARE |
| DO-6 | SPARE |
| DO-7 | SPARE |
| DO-8 | SPARE |
| DO-9 | SPARE |
| DO-10 | SPARE |
| **ANALOG INPUTS** | |
| AI-1 | TANK NO. 1 LEVEL |
| AI-2 | TANK NO. 2 LEVEL |
| AI-3 | FLOW METER |
| AI-4 | FLOW CONTROL VALVE POSITION |
| AI-5 | SPARE |
| AI-6 | SPARE |
| **ANALOG OUTPUTS** | |
| AO-1 | FLOW CONTROL VALVE POSITION SIGNAL |
| AO-2 | SPARE |

## STANDPIPES WIRELESS RADIOS & ANTENNA MOUNTING

| SITE | SITE MARKER | COORDINATES | STATION NAME | AREA | ACCESS POINT | ANTENNA HEIGHT | ANTENNA MOUNTING | RADIO | ANTENNA | GAIN |
|---|---|---|---|---|---|---|---|---|---|---|
| STANDPIPES | 18 | 31°16'53.51"N 103°18'12.04"W | STANDPIPES ACCESS POINT | SOUTH WORSHAM FIELD | - | 110' | ON TANK | UBIQUITI ROCKET 5AC PRISM GEN 2 | UBIQUITI AMO-5G13 | 13 dBi OMNI |
| STANDPIPES | 18 | 31°16'53.51"N 103°18'12.04"W | STANDPIPES ACCESS POINT (WARD TANK) | SOUTH WORSHAM FIELD | - | 110' | | UBIQUITI ROCKET 5AC PRISM GEN 2 | UBIQUITI RD-5G31-AC | 31 dBi |
| STANDPIPES | 18 | 31°16'53.51"N 103°18'12.04"W | STANDPIPES STATION | SOUTH WORSHAM FIELD | AIRPORT TANK | 110' | | UBIQUITI ROCKET 5AC PRISM GEN 2 | UBIQUITI RD-5G31-AC | 31 dBi |


BAIRD GILROY & DIXON
ELECTRICAL ENGINEERS
9711 S. Mason Rd.
Ste. 125, #326
Richmond, TX 77407
(281) 529-5005
www.bgdeng.com
TBPE No. F-16575
Job No. 115-0030


| NO. | REVISION | DATE |
|---|---|---|
| | | |

7/6/20

STATE OF TEXAS
JOHN W. GILROY, JR.
112871
LICENSED
PROFESSIONAL ENGINEER


ENPROTEC/HIBBS & TODD, INC.
ENVIRONMENTAL AND CIVIL ENGINEERING
402 Cedar Street
325-698-5560
Abilene, Texas 79601
PE Firm Registration No. 1151
PG Firm Registration No. 50103
RPLS Firm Registration No. 10011900


BAR IS ONE INCH ON ORIGINAL DRAWING
0 1
IF NOT ONE INCH ON THIS SHEET, ADJUST SCALES ACCORDINGLY.

| | |
|---|---|
| DESIGNED BY JWG | SCALE AS NOTED |
| DRAWN BY JWG | DATE 7/3/2020 |
| CHECKED BY JAD | |

**TOWN OF PECOS CITY TEXAS**
**SCADA IMPROVEMENTS**

**STANDPIPES SITE PLAN**

PROJECT NO.: 19-7469
SEQUENCE No. 18 OF 28
SHEET No. E13

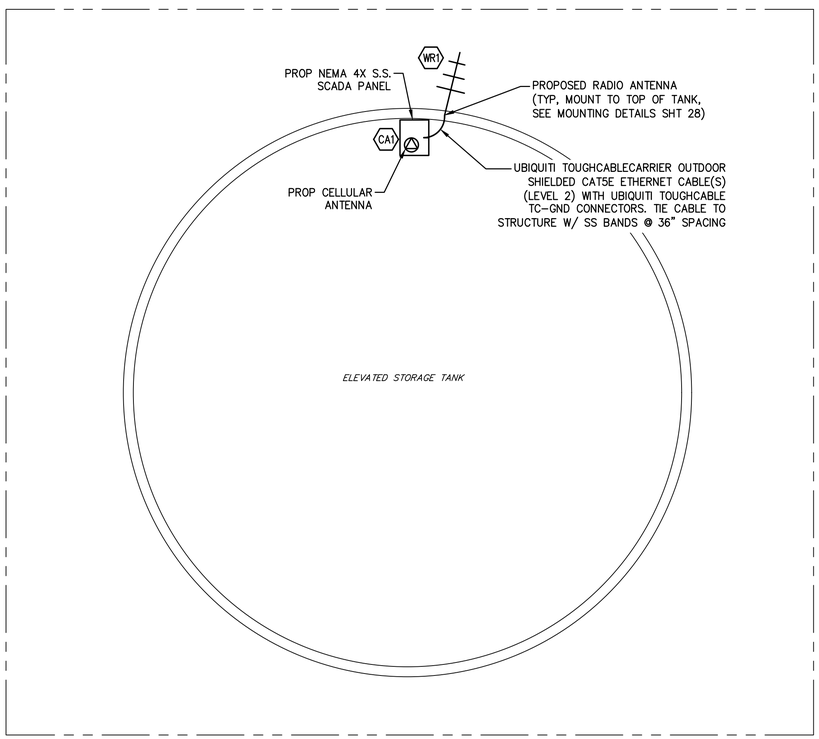


SOUTH, EAST, & WEST ELEVATED
STORAGE TANKS TYPICAL SITE PLAN
NOT TO SCALE

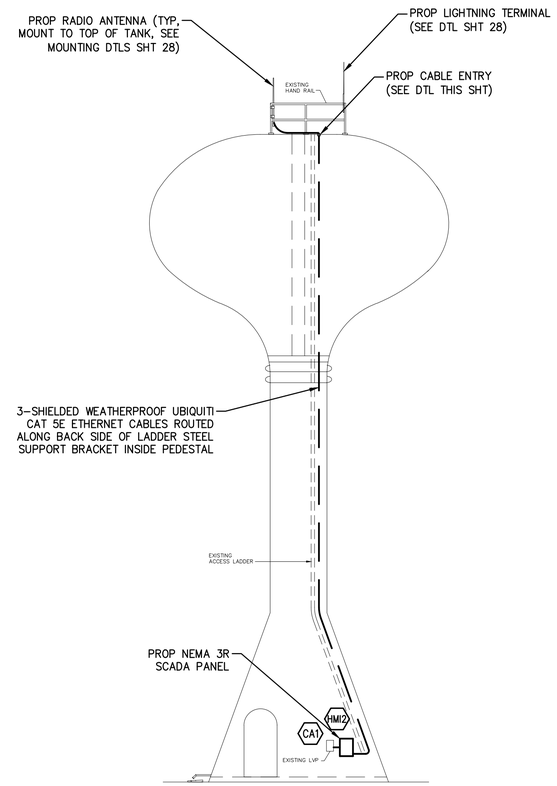


AIRPORT ELEVATED
STORAGE TANK ELEVATION PLAN
NOT TO SCALE

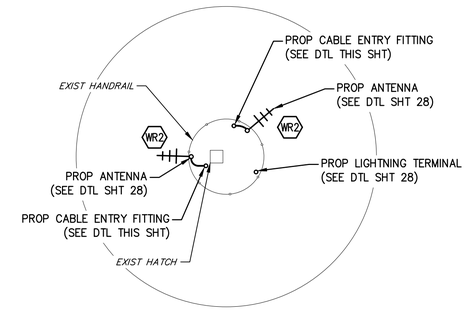


AIRPORT ELEVATED
STORAGE TANK TOP OF TANK PLAN
NOT TO SCALE

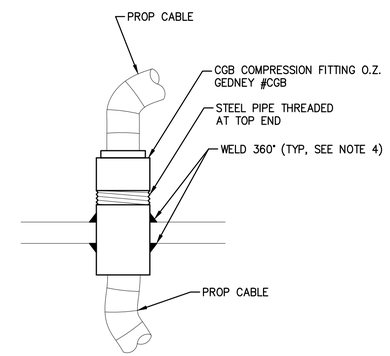


CABLE ENTRY FITTING DETAIL
NOT TO SCALE

NOTES:

1. REFER TO NETWORK ARCHITECTURE DIAGRAM FOR EQUIPMENT LIST AND INTERCONNECTION INFORMATION.
2. REPLACE EXISTING SCADA PANEL. TAG ALL I/O PRIOR TO REMOVAL AND REPLICATE CONNECTION POINTS AT PROPOSED PLC. PROVIDE I/O TAGS TO ENGINEER. ROUTE ETHERNET CABLE FROM PLC TO PROPOSED ETHERNET SWITCH.
3. REPLACE EXISTING RADIOS WITH UBIQUITI RADIO. ROUTE ETHERNET CABLE FROM INTERNAL RADIO MODEM TO PROPOSED ETHERNET SWITCH.
4. TANK COATING DAMAGED BY WELDING OF CONDUIT NIPPLE TO TANK SHALL BE REPAIRED PER THE FOLLOWING:

   POWER TOOL CLEANING (SSPC-SP3): REMOVAL OF LOOSE AND BURNED PAINT, LOOSE MIL SCALE AND OTHER DETRIMENTAL FOREIGN MATTER BY POWER WIRE BRUSHING, POWER IMPACT TOOLS OR POWER SANDERS. COAT EXTERIOR DAMAGED AREAS AFTER POWER TOOL CLEANING WITH AN ENGINEER APPROVED, DIRECT-TO-METAL (DTM) POLYURETHANE OR ACRYLIC PAINT; MINIMUM OF 3 COATS. COAT INTERIOR DAMAGED AREAS AFTER POWER TOOL CLEANING WITH AN ENGINEER APPROVED, DIRECT-TO-METAL (DTM) EPOXY PAINT; MINIMUM OF 3 COATS.

**TYPICAL ELEVATED STORAGE TANK SCADA PANEL I/O**

| | |
|---|---|
| **DIGITAL INPUTS** | |
| DI-1 | UPS FAILURE |
| DI-2 | SPARE |
| DI-3 | SPARE |
| DI-4 | SPARE |
| DI-5 | SPARE |
| DI-6 | SPARE |
| DI-7 | SPARE |
| DI-8 | SPARE |
| DI-9 | SPARE |
| DI-10 | SPARE |
| DI-11 | SPARE |
| DI-12 | SPARE |
| DI-13 | SPARE |
| DI-14 | SPARE |
| DI-15 | SPARE |
| DI-16 | SPARE |
| DI-17 | SPARE |
| DI-18 | SPARE |
| **DIGITAL OUTPUTS** | |
| DO-1 | SPARE |
| DO-2 | SPARE |
| DO-3 | SPARE |
| DO-4 | SPARE |
| DO-5 | SPARE |
| DO-6 | SPARE |
| DO-7 | SPARE |
| DO-8 | SPARE |
| DO-9 | SPARE |
| DO-10 | SPARE |
| **ANALOG INPUTS** | |
| AI-1 | PRESSURE TRANSMITTER |
| AI-2 | FUTURE CHLORINE ANALYZER |
| AI-3 | SPARE |
| AI-4 | SPARE |
| AI-5 | SPARE |
| AI-6 | SPARE |
| **ANALOG OUTPUTS** | |
| AO-1 | SPARE |
| AO-2 | SPARE |

**ELEVATED STORAGE TANKS (EST) WIRELESS RADIOS & ANTENNA MOUNTING**

| SITE | SITE MARKER | COORDINATES | AREA | STATION NAME | ACCESS POINT | ANTENNA HEIGHT | ANTENNA MOUNTING | RADIO | ANTENNA | GAIN |
|---|---|---|---|---|---|---|---|---|---|---|
| SOUTH ELEVATED TANK | 26 | 31°23'37.95"N 103°31'28.93"W | TOWN OF PECOS | SOUTH TANK | AIRPORT TANK | 120' | ON TANK | UBIQUITI POWERBEAM 5AC GEN2 | PROVIDE W/PBE-RAD-400 | 25 dBi |
| WEST ELEVATED TANK | 29 | 31°24'55.75"N 103°30'17.08"W | TOWN OF PECOS | WEST TANK | AIRPORT TANK | 120' | ON TANK | UBIQUITI POWERBEAM 5AC GEN2 | PROVIDE W/PBE-RAD-400 | 25 dBi |
| EAST ELEVATED TANK | 30 | 31°25'28.70"N 103°29'19.52"W | TOWN OF PECOS | EAST TANK | AIRPORT TANK | 120' | ON TANK | UBIQUITI POWERBEAM 5AC GEN2 | PROVIDE W/PBE-RAD-400 | 25 dBi |
| AIRPORT ELEVATED TANK | 31 | 31°23'33.6"N 103°30'29.3"W | TOWN OF PECOS | AIRPORT TANK ACCESS POINT | - | 120' | ON TANK | UBIQUITI ROCKET 5AC PRISM GEN 2 | UBIQUITI AM-V2G-TI | 21 dBi (60°) |
| AIRPORT ELEVATED TANK | 31 | 31°23'33.6"N 103°30'29.3"W | TOWN OF PECOS | AIRPORT TANK PTP TO STANDPIPES | - | 120' | ON TANK | UBIQUITI ROCKET 5AC PRISM GEN 2 | UBIQUITI RD-5G31-AC | 31 dBi |

BAIRD GILROY & DIXON
ELECTRICAL ENGINEERS
9711 S. Mason Rd.
Ste. 125, #326
Richmond, TX 77407
(281) 529-5005
www.bgdeng.com
TBPE No. F-16575
Job No. 115-0030

| NO. | REVISION | DATE |
|---|---|---|
| | | |

7/6/20

STATE OF TEXAS
JOHN W. GILROY, JR.
112871
LICENSED PROFESSIONAL ENGINEER

ENPROTEC/HIBBS & TODD, INC.
ENVIRONMENTAL AND CIVIL ENGINEERING
402 Cedar Street
325-698-5560
Abilene, Texas 79601
PE Firm Registration No. 1151
PG Firm Registration No. 50103
RPLS Firm Registration No. 10011900

BAR IS ONE INCH ON ORIGINAL DRAWING
0 1
IF NOT ONE INCH ON THIS SHEET, ADJUST SCALES ACCORDINGLY.

| | |
|---|---|
| DESIGNED BY JWG | SCALE AS NOTED |
| DRAWN BY JWG | DATE 7/3/2020 |
| CHECKED BY JAD | |

TOWN OF PECOS CITY TEXAS
SCADA IMPROVEMENTS

ELEVATED STORAGE TANKS
TYPICAL SITE PLAN

PROJECT NO.: 19-7469
SEQUENCE No. 19 OF 28
SHEET No. E14

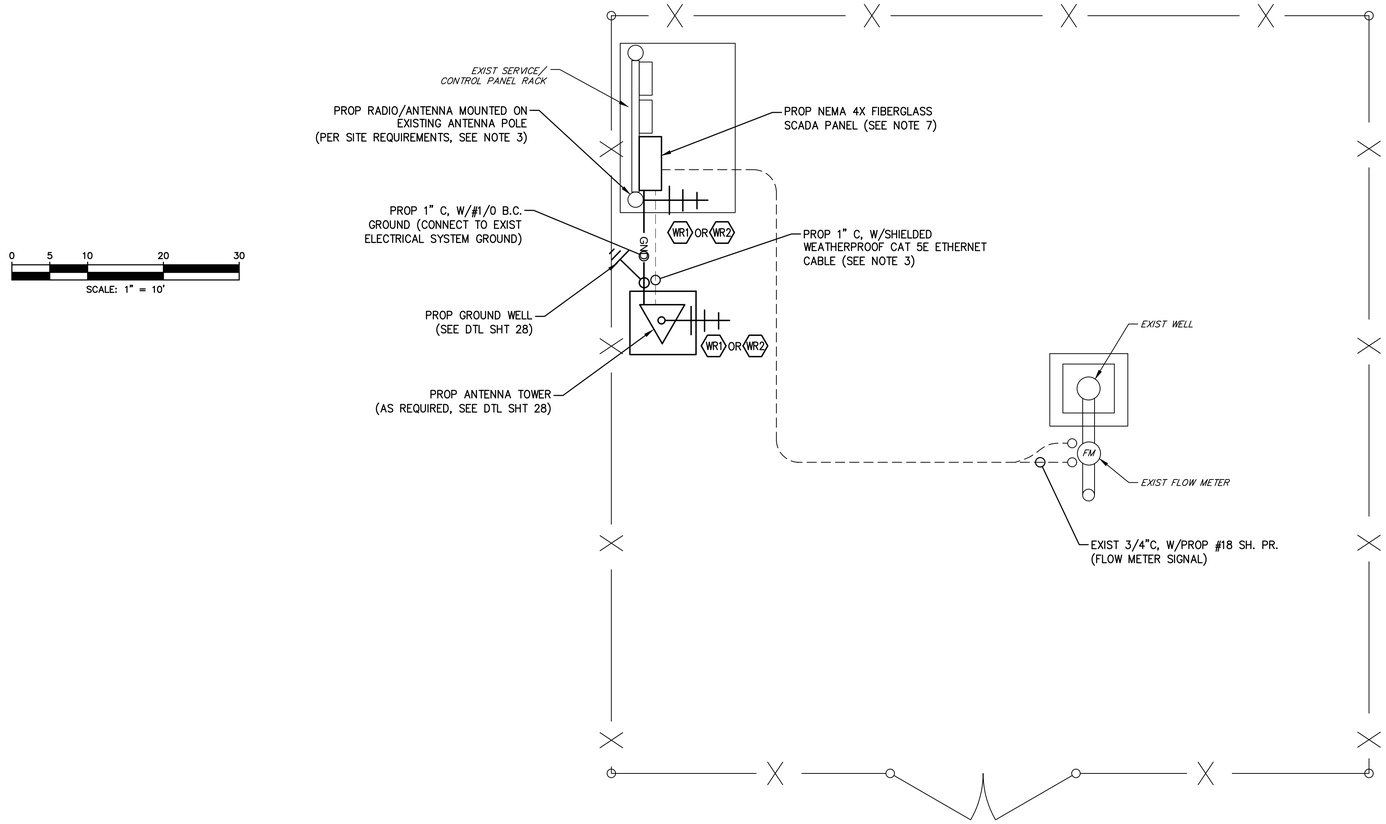


NOTES:

1. ROUTE #18 SHIELDED TWISTED PAIR CABLE THROUGH EXISTING SPARE CONDUIT FROM FLOW METER TO SCADA CONTROL PANEL. LAND AT NEXT AVAILABLE ANALOG INPUT IN PLC. USE LIQUID TIGHT FLEXIBLE CONDUIT TO CONNECT EXISTING CONDUIT TO FLOW METER.
2. SITE PLAN IS TYPICAL FOR ALL REMOTE WELL SITES. DISTANCE BETWEEN FLOW METER AND CONTROL PANEL IS TYPICALLY LESS THAN 75 FT. FIELD VERIFY CONDITIONS FOR EACH SPECIFIC SITE PRIOR TO BID AND ADJUST PLAN AND EQUIPMENT AS NECESSARY.
3. SEE REMOTE WELL SITES WIRELESS RADIOS & ANTENNA MOUNTING TABLE FOR RADIO AND ANTENNA TOWER REQUIREMENTS FOR EACH REMOTE WELL SITE.
4. FOR SITES UTILIZING EXISTING ANTENNA POLES, REPLACE EXISTING RADIO ANTENNA WITH UBIQUITI RADIO SYSTEM. ROUTE UBIQUITI TOUGHCABLECARRIER OUTDOOR SHIELDED CAT5E ETHERNET CABLE (LEVEL 2) WITH UBIQUITI TOUGHCABLE CONNECTORS FROM WIRELESS RADIO MODEM TO PROPOSED ETHERNET SWITCH. TIE CABLE TO POLE W/ SS BANDS @ 36" SPACING. PROVIDE ALL NECESSARY HARDWARE FOR MOUNTING ANTENNA TO EXISTING 4" DIAMETER POLE.
5. FOR SITES WITH PROPOSED ANTENNA TOWERS, REMOVE EXISTING ANTENNA AND ANTENNA CABLE FROM SERVICE RACK POLE.
6. INSTALL GROMMET AROUND ETHERNET CABLE AT CONTROL PANEL, SEAL INSTALL METAL PLATE OVER EXISTING ANTENNA CABLE PENETRATION.
7. FOR SITES WITH EXISTING SCADA EQUIPMENT INSIDE CONTROL PANEL, ROUTE 2-#12 + #12 GND FOR PROPOSED SCADA PANEL POWER. ROUTE #14 AWG CONDUCTORS FROM EXISTING TERMINAL BLOCKS TO PROPOSED SCADA PANEL FOR DISCRETE SIGNALS, AND #18 SH. PR. FOR ANALOG SIGNALS.

## REMOTE WELL SITES WIRELESS RADIOS & ANTENNA MOUNTING

| SITE | SITE MARKER | AREA | COORDINATES | STATION NAME | ACCESS POINT | ANTENNA HEIGHT | ANTENNA MOUNTING | RADIO | ANTENNA | GAIN |
|---|---|---|---|---|---|---|---|---|---|---|
| SOUTH WORSHAM WELL 50-25-1 | 1 | SOUTH WORSHAM FIELD | 31°14'13.36"N 103°16'46.46"W | SOUTH WORSHAM WELL 50-25-1 | STANDPIPES | 30' | PROP 30' TOWER | UBIQUITI POWERBEAM 5AC GEN2 | PROVIDE W/PBE-RAD-400 | 25 dBi |
| SOUTH WORSHAM WELL 50-25-5 | 2 | SOUTH WORSHAM FIELD | 31°14'13.45"N 103°16'17.89"W | SOUTH WORSHAM WELL 50-25-5 | STANDPIPES | 30' | PROP 30' TOWER | UBIQUITI POWERBEAM 5AC GEN2 | PROVIDE W/PBE-RAD-400 | 25 dBi |
| SOUTH WORSHAM WELL 50-25-6 | 3 | SOUTH WORSHAM FIELD | 31°14'20.94"N 103°17'05.36"W | SOUTH WORSHAM WELL 50-25-6 | STANDPIPES | 30' | PROP 30' TOWER | UBIQUITI POWERBEAM 5AC GEN2 | PROVIDE W/PBE-RAD-400 | 25 dBi |
| SOUTH WORSHAM WELL 50-25-7 | 4 | SOUTH WORSHAM FIELD | 31°14'37.51"N 103°17'14.45"W | SOUTH WORSHAM WELL 50-25-7 | STANDPIPES | 30' | PROP 30' TOWER | UBIQUITI POWERBEAM 5AC GEN2 | PROVIDE W/PBE-RAD-400 | 25 dBi |
| SOUTH WORSHAM WELL 50-25-8 | 5 | SOUTH WORSHAM FIELD | 31°14'37.63"N 103°16'46.27"W | SOUTH WORSHAM WELL 50-25-8 | STANDPIPES | 30' | PROP 30' TOWER | UBIQUITI POWERBEAM 5AC GEN2 | PROVIDE W/PBE-RAD-400 | 25 dBi |
| SOUTH WORSHAM WELL 50-23-3 | 6 | SOUTH WORSHAM FIELD | 31°14'41.39"N 103°17'47.44"W | SOUTH WORSHAM WELL 50-23-3 | STANDPIPES | 20' | EXIST POLE | UBIQUITI POWERBEAM 5AC GEN2 | PROVIDE W/PBE-RAD-400 | 25 dBi |
| SOUTH WORSHAM WELL 50-24-1 | 7 | SOUTH WORSHAM FIELD | 31°15'01.83"N 103°16'47.47"W | SOUTH WORSHAM WELL 50-24-1 | STANDPIPES | 20' | EXIST POLE | UBIQUITI POWERBEAM 5AC GEN2 | PROVIDE W/PBE-RAD-400 | 25 dBi |
| SOUTH WORSHAM WELL 50-23-2 | 8 | SOUTH WORSHAM FIELD | 31°15'05.67"N 103°17'19.23"W | SOUTH WORSHAM WELL 50-23-2 | STANDPIPES | 20' | EXIST POLE | UBIQUITI POWERBEAM 5AC GEN2 | PROVIDE W/PBE-RAD-400 | 25 dBi |
| SOUTH WORSHAM WELL 50-21-2 | 9 | SOUTH WORSHAM FIELD | 31°15'29.64"N 103°19'21.19"W | SOUTH WORSHAM WELL 50-21-2 | STANDPIPES | 20' | EXIST POLE | UBIQUITI POWERBEAM 5AC GEN2 | PROVIDE W/PBE-RAD-400 | 25 dBi |
| SOUTH WORSHAM WELL 50-13-3 | 10 | SOUTH WORSHAM FIELD | 31°15'34.12"N 103°16'46.55"W | SOUTH WORSHAM WELL 50-13-3 | STANDPIPES | 20' | EXIST POLE | UBIQUITI POWERBEAM 5AC GEN2 | PROVIDE W/PBE-RAD-400 | 25 dBi |
| SOUTH WORSHAM WELL 50-13-4 | 11 | SOUTH WORSHAM FIELD | 31°15'34.16"N 103°16'18.42"W | SOUTH WORSHAM WELL 50-13-4 | STANDPIPES | 20' | EXIST POLE | UBIQUITI POWERBEAM 5AC GEN2 | PROVIDE W/PBE-RAD-400 | 25 dBi |
| SOUTH WORSHAM WELL 50-15-1 | 12 | SOUTH WORSHAM FIELD | 31°15'52.53"N 103°18'35.49"W | SOUTH WORSHAM WELL 50-15-1 | STANDPIPES | 20' | EXIST POLE | UBIQUITI POWERBEAM 5AC GEN2 | PROVIDE W/PBE-RAD-400 | 25 dBi |
| SOUTH WORSHAM WELL 50-13-2 | 13 | SOUTH WORSHAM FIELD | 31°15'59.58"N 103°17'14.86"W | SOUTH WORSHAM WELL 50-13-2 | STANDPIPES | 20' | EXIST POLE | UBIQUITI POWERBEAM 5AC GEN2 | PROVIDE W/PBE-RAD-400 | 25 dBi |
| SOUTH WORSHAM WELL 50-13-1 | 14 | SOUTH WORSHAM FIELD | 31°16'00.87"N 103°16'49.17"W | SOUTH WORSHAM WELL 50-13-1 | STANDPIPES | 20' | EXIST POLE | UBIQUITI POWERBEAM 5AC GEN2 | PROVIDE W/PBE-RAD-400 | 25 dBi |
| SOUTH WORSHAM WELL 50-09-2 | 15 | SOUTH WORSHAM FIELD | 31°16'49.83"N 103°19'21.40"W | SOUTH WORSHAM WELL 50-09-2 | STANDPIPES | 20' | EXIST POLE | UBIQUITI POWERBEAM 5AC GEN2 | PROVIDE W/PBE-RAD-400 | 25 dBi |
| SOUTH WORSHAM WELL 50-10-1 | 16 | SOUTH WORSHAM FIELD | 31°16'49.88"N 103°19'00.65"W | SOUTH WORSHAM WELL 50-10-1 | STANDPIPES | 20' | EXIST POLE | UBIQUITI POWERBEAM 5AC GEN2 | PROVIDE W/PBE-RAD-400 | 25 dBi |
| SOUTH WORSHAM WELL 50-10-2 | 17 | SOUTH WORSHAM FIELD | 31°16'50.00"N 103°18'39.04"W | SOUTH WORSHAM WELL 50-10-2 | STANDPIPES | 20' | EXIST POLE | UBIQUITI POWERBEAM 5AC GEN2 | PROVIDE W/PBE-RAD-400 | 25 dBi |
| WORSHAM WELL 11 | 19 | WORSHAM WELL FIELD | 31°19'30.86"N 103°16'31.14"W | WORSHAM WELL 11 | STANDPIPES | 40' | PROP 40' TOWER | UBIQUITI ROCKET 5AC PRISM GEN 2 | UBIQUITI RD-5G31-AC | 31 dBi |
| WORSHAM WELL 10 | 20 | WORSHAM WELL FIELD | 31°19'56.46"N 103°17'24.71"W | WORSHAM WELL 10 | STANDPIPES | 40' | PROP 30' TOWER | UBIQUITI ROCKET 5AC PRISM GEN 2 | UBIQUITI RD-5G31-AC | 31 dBi |
| WORSHAM WELL 16 | 21 | WORSHAM WELL FIELD | 31°20'13.99"N 103°17'57.29"W | WORSHAM WELL 16 | BLENDING TANKS | 50' | PROP 50' TOWER | UBIQUITI POWERBEAM 5AC GEN2 | PROVIDE W/PBE-RAD-400 | 25 dBi |
| WORSHAM WELL 17 | 22 | WORSHAM WELL FIELD | 31°20'41.42"N 103°17'43.99"W | WORSHAM WELL 17 | BLENDING TANKS | 50' | PROP 50' TOWER | UBIQUITI POWERBEAM 5AC GEN2 | PROVIDE W/PBE-RAD-400 | 25 dBi |
| WORSHAM WELL 12 | 23 | WORSHAM WELL FIELD | 31°20'44.85"N 103°17'57.42"W | WORSHAM WELL 12 | BLENDING TANKS | 40' | PROP 40' TOWER | UBIQUITI POWERBEAM 5AC GEN2 | PROVIDE W/PBE-RAD-400 | 25 dBi |
| WARD COUNTY WELL 7 | 32 | WARD COUNTY FIELD | 31°28'19.32"N 103°01'58.03"W | WARD COUNTY WELL 7 | WARD TANK | 20' | PROP 20' POLE | UBIQUITI POWERBEAM 5AC GEN2 | PROVIDE W/PBE-RAD-400 | 25 dBi |
| WARD COUNTY WELL 4 | 33 | WARD COUNTY FIELD | 31°28'36.19"N 103°01'38.69"W | WARD COUNTY WELL 4 | WARD TANK | 20' | PROP 20' POLE | UBIQUITI POWERBEAM 5AC GEN2 | PROVIDE W/PBE-RAD-400 | 25 dBi |
| WARD COUNTY WELL 5 | 35 | WARD COUNTY FIELD | 31°28'48.38"N 103°02'48.58"W | WARD COUNTY WELL 5 | WARD TANK | 20' | PROP 20' POLE | UBIQUITI POWERBEAM 5AC GEN2 | PROVIDE W/PBE-RAD-400 | 25 dBi |
| WARD COUNTY WELL 1-B | 36 | WARD COUNTY FIELD | 31°28'48.75"N 103°01'27.66"W | WARD COUNTY WELL 1-B | WARD TANK | 30' | PROP 30' TOWER | UBIQUITI POWERBEAM 5AC GEN2 | PROVIDE W/PBE-RAD-400 | 25 dBi |
| WARD COUNTY WELL 2 | 37 | WARD COUNTY FIELD | 31°29'07.16"N 103°01'45.07"W | WARD COUNTY WELL 2 | WARD TANK | 20' | PROP 20' POLE | UBIQUITI POWERBEAM 5AC GEN2 | PROVIDE W/PBE-RAD-400 | 25 dBi |
| WARD COUNTY WELL 6 | 38 | WARD COUNTY FIELD | 31°29'08.21"N 103°02'28.65"W | WARD COUNTY WELL 6 | WARD TANK | 20' | PROP 20' POLE | UBIQUITI POWERBEAM 5AC GEN2 | PROVIDE W/PBE-RAD-400 | 25 dBi |
| WARD COUNTY WELL 3 | 39 | WARD COUNTY FIELD | 31°29'27.94"N 103°02'14.39"W | WARD COUNTY WELL 3 | WARD TANK | 20' | PROP 20' POLE | UBIQUITI POWERBEAM 5AC GEN2 | PROVIDE W/PBE-RAD-400 | 25 dBi |

BAIRD GILROY & DIXON
ELECTRICAL ENGINEERS
9711 S. Mason Rd.
Ste. 125, #326
Richmond, TX 77407
(281) 529-5005
www.bgdeng.com
TBPE No. F-16575
Job No. 115-0030

| NO. | REVISION | DATE |
|---|---|---|
| | | |

7/6/20

STATE OF TEXAS
JOHN W. GILROY, JR.
112871
LICENSED PROFESSIONAL ENGINEER

ENPROTEC/HIBBS & TODD, INC.
ENVIRONMENTAL AND CIVIL ENGINEERING
402 Cedar Street
Abilene, Texas 79601
325-698-5560
PE Firm Registration No. 1151
PG Firm Registration No. 50103
RPLS Firm Registration No. 10011900

BAR IS ONE INCH ON ORIGINAL DRAWING
0 1
IF NOT ONE INCH ON THIS SHEET, ADJUST SCALES ACCORDINGLY.

| | |
|---|---|
| DESIGNED BY JWG | SCALE AS NOTED |
| DRAWN BY JWG | DATE 7/3/2020 |
| CHECKED BY JAD | |

TOWN OF PECOS CITY TEXAS
SCADA IMPROVEMENTS

REMOTE WELLS TYPICAL SITE PLAN

PROJECT NO.: 19-7469
SEQUENCE No. 20 OF 28
SHEET No. E15

NOTES:

1. ROUTE SHIELDED TWISTED PAIR CABLE THROUGH EXISTING SPARE CONDUIT FROM FLOW METER TO SCADA CONTROL PANEL. LAND AT NEXT AVAILABLE ANALOG INPUT IN PLC. USE LIQUID TIGHT FLEXIBLE CONDUIT TO CONNECT EXISTING CONDUIT TO FLOW METER.
2. DISTANCE BETWEEN FLOW METER AND CONTROL PANEL IS TYPICALLY LESS THAN 100 FT. THIS DRAWING DEPICTS THE TYPICAL WELL SITE. FIELD VERIFY CONDITIONS FOR EACH SPECIFIC SITE PRIOR TO BID.
3. REFER TO NETWORK ARCHITECTURE DIAGRAM FOR EQUIPMENT LIST AND INTERCONNECTION INFORMATION.
4. REPLACE EXISTING SCADAPACK 100 PLC WITH SCADAPACK 32 PLC. TAG ALL I/O PRIOR TO REMOVAL AND REPLICATE CONNECTION POINTS AT PROPOSED PLC. PROIVDE I/O TAGS TO ENGINEER. ROUTE ETHERNET CABLE FROM PLC TO PROPOSED ETHERNET SWTICH.
5. REPLACE EXISTING RADIO ANTENNA WITH UBIQUITI RADIO SYSTEM. ROUTE UBIQUITI TOUGHCABLECARRIER OUTDOOR SHIELDED CAT5E ETHERNET CABLE (LEVEL 2) WITH UBIQUITI TOUGHCABLE CONNECTORS FROM WIRELESS RADIO TO PROPOSED ETHERNET SWITCH. TIE CABLE TO POLE W/ SS BANDS @ 36" SPACING. INSTALL GROMMET AROUND CABLE AT CONTROL PANEL, SEAL INSTALL METAL PLATE OVER EXISTING ANTENNA CABLE PENETRATION.
6. FOR SITES WITH EXISTING SCADA EQUIPMENT INSIDE CONTROL PANEL, ROUTE 2–#12 + #12 GND FOR PROPOSED SCADA PANEL POWER. ROUTE #14 AWG CONDUCTORS FROM EXISTING TERMINAL BLOCKS TO PROPOSED SCADA PANEL FOR DISCRETE SIGNALS, AND #18 SH. PR. FOR ANALOG SIGNALS.

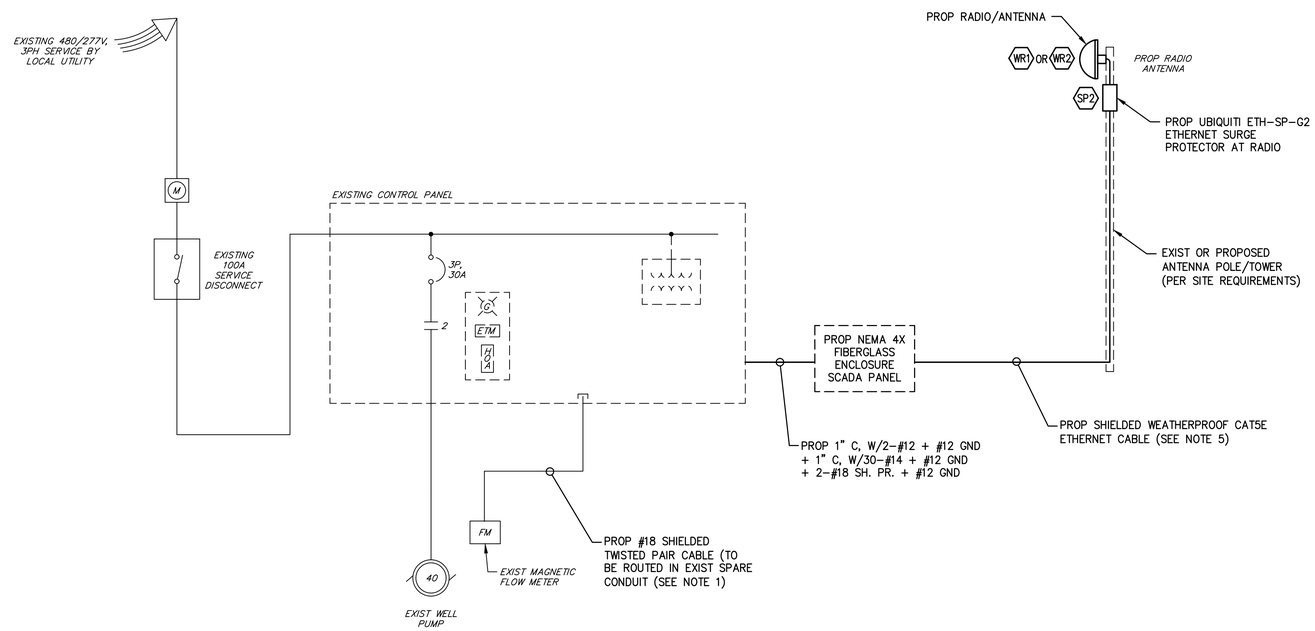


REMOTE WELL SITE (TYPICAL)

NOT TO SCALE

## TYPICAL WELL SITE SCADA PANEL I/O

| | |
|---|---|
| **DIGITAL INPUTS** | |
| DI-1 | WELL PUMP RUNNING |
| DI-2 | WELL PUMP HOA IN AUTO |
| DI-3 | WELL PUMP HOA IN HAND |
| DI-4 | WELL PUMP OVERLOAD |
| DI-5 | PHASE FAILURE RELAY |
| DI-6 | UPS FAILURE |
| DI-7 | SPARE |
| DI-8 | SPARE |
| DI-9 | SPARE |
| DI-10 | SPARE |
| DI-11 | SPARE |
| DI-12 | SPARE |
| DI-13 | SPARE |
| DI-14 | SPARE |
| DI-15 | SPARE |
| DI-16 | SPARE |
| DI-17 | SPARE |
| DI-18 | SPARE |
| **DIGITAL OUTPUTS** | |
| DO-1 | WELL PUMP CALL |
| DO-2 | SPARE |
| DO-3 | SPARE |
| DO-4 | SPARE |
| DO-5 | SPARE |
| DO-6 | SPARE |
| DO-7 | SPARE |
| DO-8 | SPARE |
| DO-9 | SPARE |
| DO-10 | SPARE |
| **ANALOG INPUTS** | |
| AI-1 | MOTOR CT AMPERAGE |
| AI-2 | WELL FLOW METER |
| AI-3 | SPARE |
| AI-4 | SPARE |
| AI-5 | SPARE |
| AI-6 | SPARE |
| **ANALOG OUTPUTS** | |
| AO-1 | SPARE |
| AO-2 | SPARE |


BAIRD GILROY & DIXON
ELECTRICAL ENGINEERS
9711 S. Mason Rd.
Ste. 125, #326
Richmond, TX 77407
(281) 529–5005
www.bgdeng.com
TBPE No. F–16575
Job No. 115–0030


| NO. | REVISION | DATE |
|---|---|---|
| | | |

7/6/20

STATE OF TEXAS
JOHN W. GILROY, JR.
112871
LICENSED PROFESSIONAL ENGINEER


ENPROTEC/HIBBS & TODD, INC.
ENVIRONMENTAL AND CIVIL ENGINEERING
402 Cedar Street
325-698-5560
Abilene, Texas 79601
PE Firm Registration No. 1151
PG Firm Registration No. 50103
RPLS Firm Registration No. 10011900


BAR IS ONE INCH ON ORIGINAL DRAWING
0 1
IF NOT ONE INCH ON THIS SHEET, ADJUST SCALES ACCORDINGLY.

| | |
|---|---|
| DESIGNED BY JWG | SCALE AS NOTED |
| DRAWN BY JWG | DATE 7/3/2020 |
| CHECKED BY JAD | |

TOWN OF PECOS CITY TEXAS
SCADA IMPROVEMENTS

# REMOTE WELL TYPICAL ONE-LINE DIAGRAM

PROJECT NO.: 19-7469

SEQUENCE No. 21 OF 28

SHEET No. E16

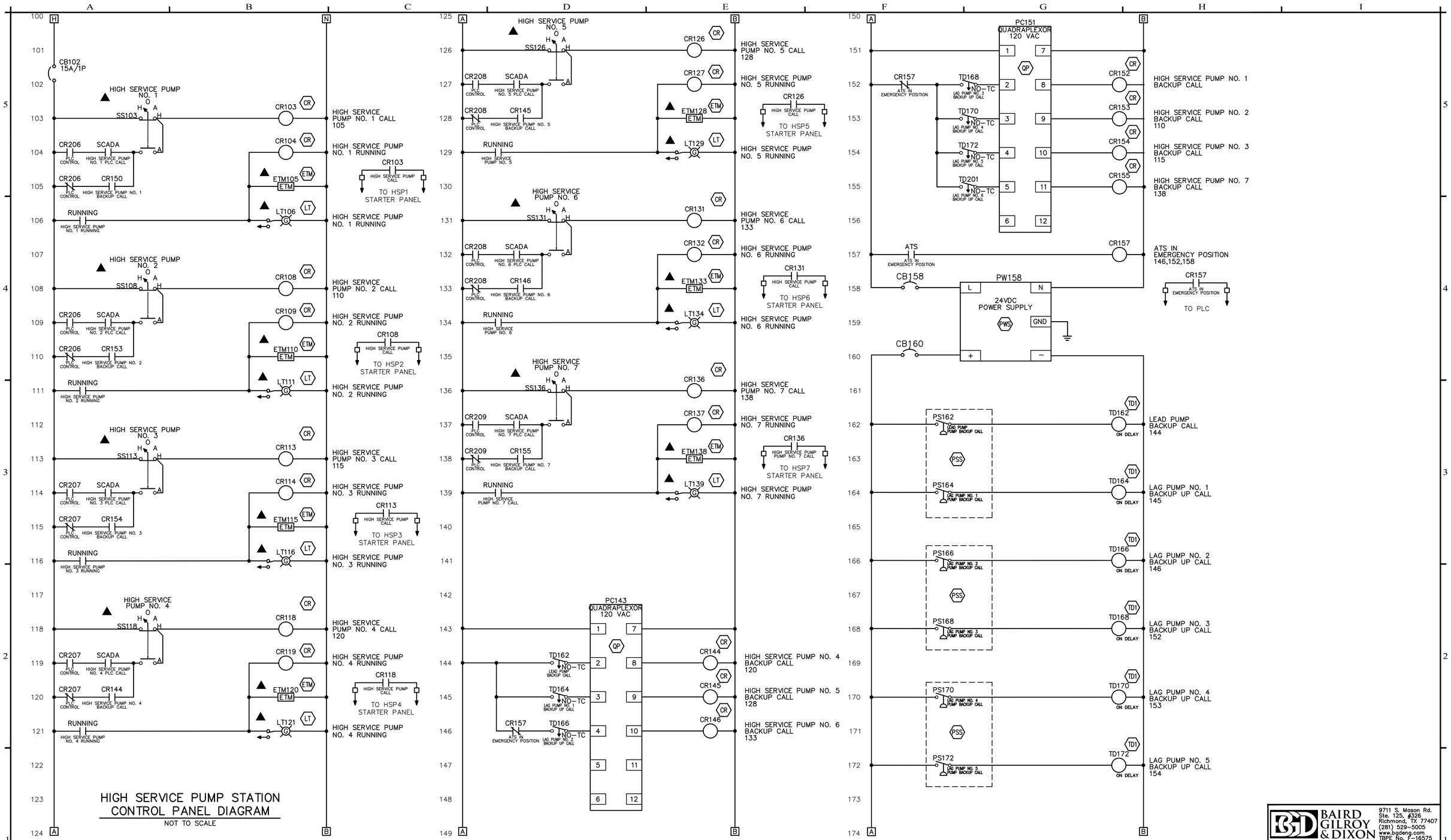


HIGH SERVICE PUMP STATION CONTROL PANEL DIAGRAM

NOT TO SCALE

BAIRD GILROY & DIXON ELECTRICAL ENGINEERS
9711 S. Mason Rd. Ste. 125, #326 Richmond, TX 77407 (281) 529-5005 www.bgdeng.com TBPE No. F-16575 Job No. 115-0030

| NO. | REVISION | DATE |
|---|---|---|
| | | |

7/6/20

STATE OF TEXAS — JOHN W. GILROY, JR. — 112871 — LICENSED PROFESSIONAL ENGINEER

ENPROTEC/HIBBS & TODD, INC.
ENVIRONMENTAL AND CIVIL ENGINEERING
402 Cedar Street Abilene, Texas 79601
325-698-5560
PE Firm Registration No. 1151
PG Firm Registration No. 50103
RPLS Firm Registration No. 10011900

BAR IS ONE INCH ON ORIGINAL DRAWING
0 1
IF NOT ONE INCH ON THIS SHEET, ADJUST SCALES ACCORDINGLY.

| DESIGNED BY | SCALE |
|---|---|
| JWG | AS NOTED |
| DRAWN BY JWG | DATE |
| CHECKED BY JAD | 7/6/2020 |

TOWN OF PECOS CITY TEXAS
SCADA IMPROVEMENTS

# HIGH SERVICE PUMP STATION CONTROL PANEL CONTROL DIAGRAMS SHEET 1

PROJECT NO.: 19-7469
SEQUENCE No. 22 OF 28
SHEET No. E17

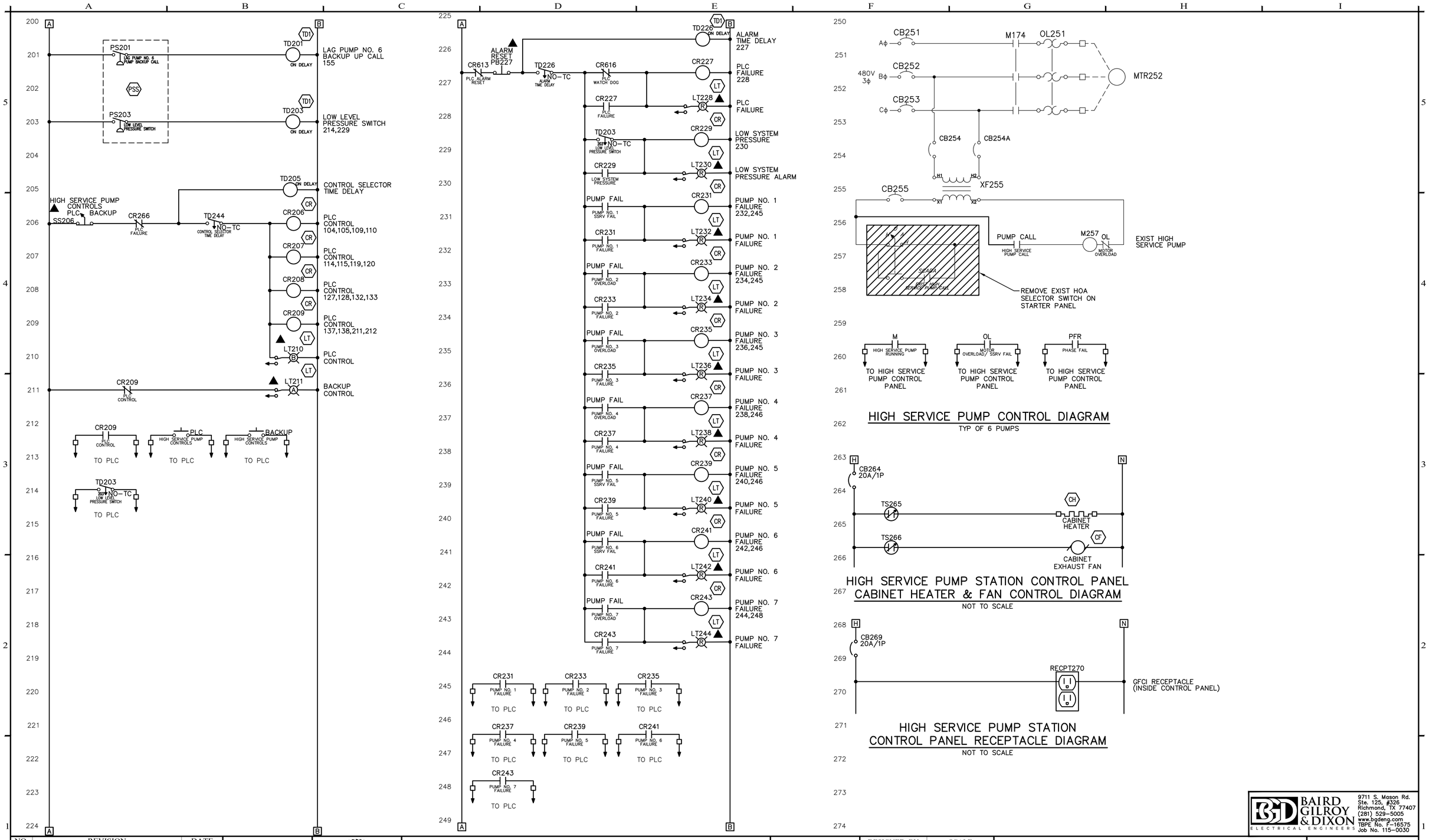


BAIRD GILROY & DIXON ELECTRICAL ENGINEERS
9711 S. Mason Rd.
Ste. 125, #326
Richmond, TX 77407
(281) 529-5005
www.bgdeng.com
TBPE No. F-16575
Job No. 115-0030

| NO. | REVISION | DATE |
|---|---|---|
| | | |

JOHN W. GILROY, JR. 112871 LICENSED PROFESSIONAL ENGINEER STATE OF TEXAS
7/6/20

**ENPROTEC/HIBBS & TODD, INC.**
ENVIRONMENTAL AND CIVIL ENGINEERING
402 Cedar Street
Abilene, Texas 79601
325-698-5560
PE Firm Registration No. 1151
PG Firm Registration No. 50103
RPLS Firm Registration No. 10011900

BAR IS ONE INCH ON ORIGINAL DRAWING
0 1
IF NOT ONE INCH ON THIS SHEET, ADJUST SCALES ACCORDINGLY.

| DESIGNED BY | SCALE |
|---|---|
| JWG | AS NOTED |
| DRAWN BY JWG | DATE |
| CHECKED BY JAD | 7/6/2020 |

TOWN OF PECOS CITY TEXAS
SCADA IMPROVEMENTS

**HIGH SERVICE PUMP STATION CONTROL PANEL CONTROL DIAGRAMS SHEET 2**

PROJECT NO.: 19-7469
SEQUENCE No. 23 OF 28
SHEET No. E18

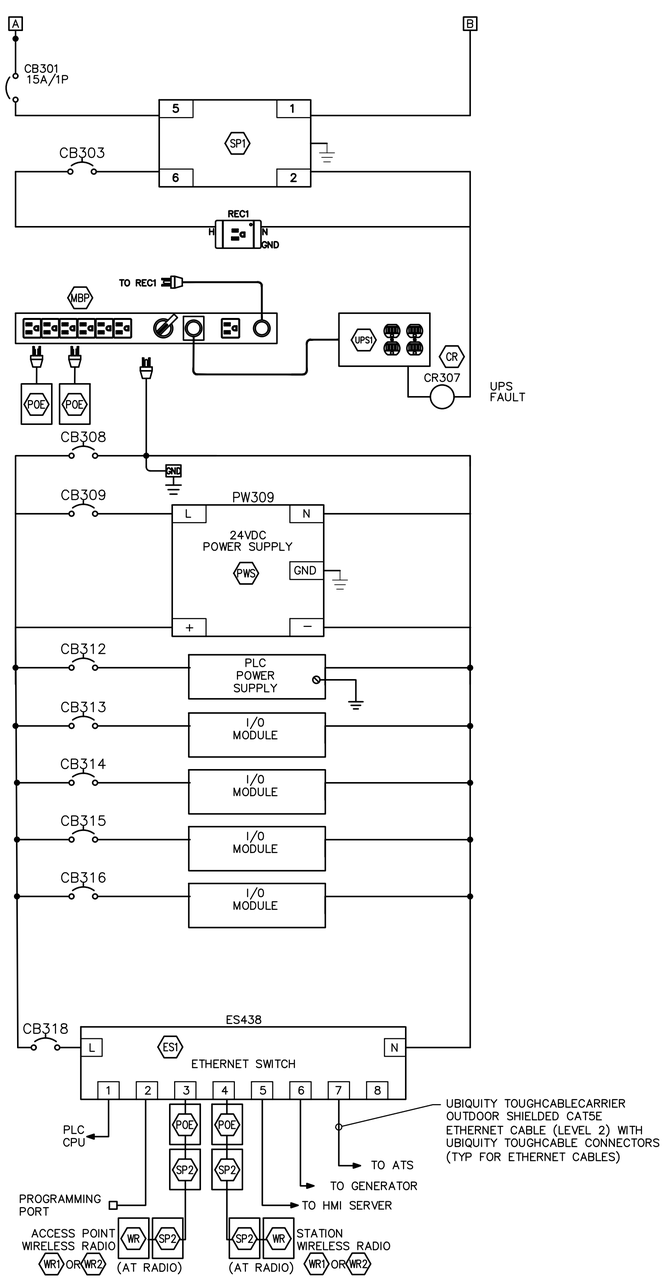


CITY YARD HIGH SERVICE PUMP STATION
SCADA PANEL PLC POWER SUPPLY DIAGRAM

NOT TO SCALE

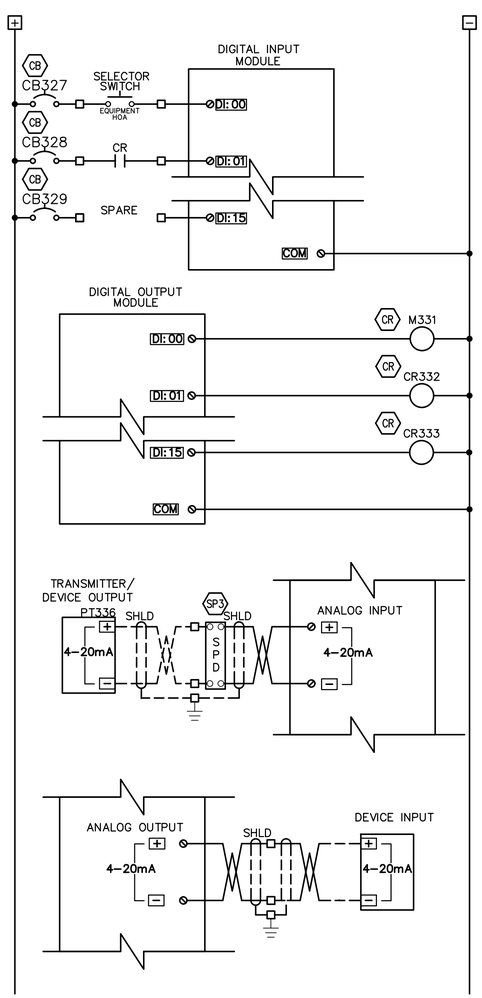


CITY YARD HIGH SERVICE PUMP STATION
SCADA PANEL TYPICAL PLC I/O DIAGRAM

NOT TO SCALE

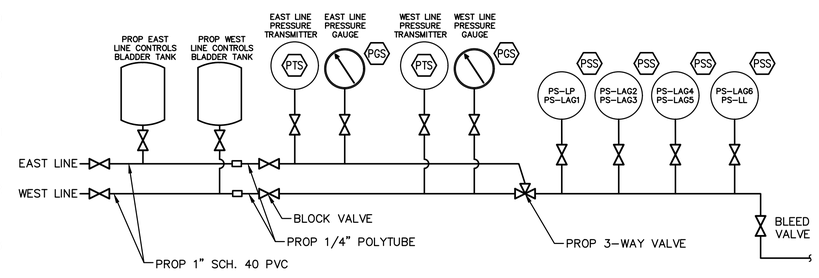


HIGH SERVICE PUMP STATION
PRESSURE SWITCH/ TRANSMITTER PIPING

NOT TO SCALE

BAIRD GILROY & DIXON
ELECTRICAL ENGINEERS
9711 S. Mason Rd.
Ste. 125, #326
Richmond, TX 77407
(281) 529–5005
www.bgdeng.com
TBPE No. F–16575
Job No. 115–0030

| NO. | REVISION | DATE |
|---|---|---|
| | | |

7/6/20

STATE OF TEXAS
JOHN W. GILROY, JR.
112871
LICENSED
PROFESSIONAL ENGINEER

ENPROTEC/HIBBS & TODD, INC.
ENVIRONMENTAL AND CIVIL ENGINEERING
402 Cedar Street
Abilene, Texas 79601
325-698-5560
PE Firm Registration No. 1151
PG Firm Registration No. 50103
RPLS Firm Registration No. 10011900

BAR IS ONE INCH ON ORIGINAL DRAWING
0 1
IF NOT ONE INCH ON THIS SHEET, ADJUST SCALES ACCORDINGLY.

| DESIGNED BY | SCALE |
|---|---|
| JWG | AS NOTED |
| DRAWN BY JWG | DATE 7/6/2020 |
| CHECKED BY JAD | |

TOWN OF PECOS CITY TEXAS
SCADA IMPROVEMENTS

HIGH SERVICE PUMP STATION
CONTROL PANEL CONTROL
DIAGRAMS SHEET 3

PROJECT NO.: 19-7469
SEQUENCE No. 24 OF 28
SHEET No. E19

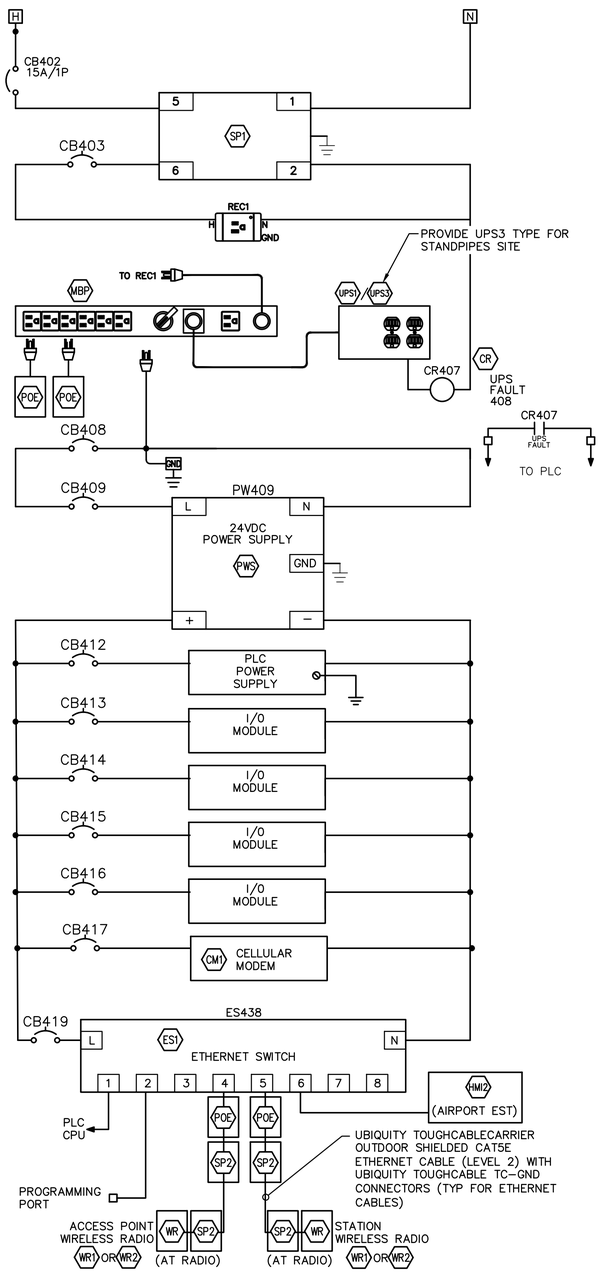


TYPICAL SCADA PANEL
PLC POWER SUPPLY DIAGRAM
NOT TO SCALE

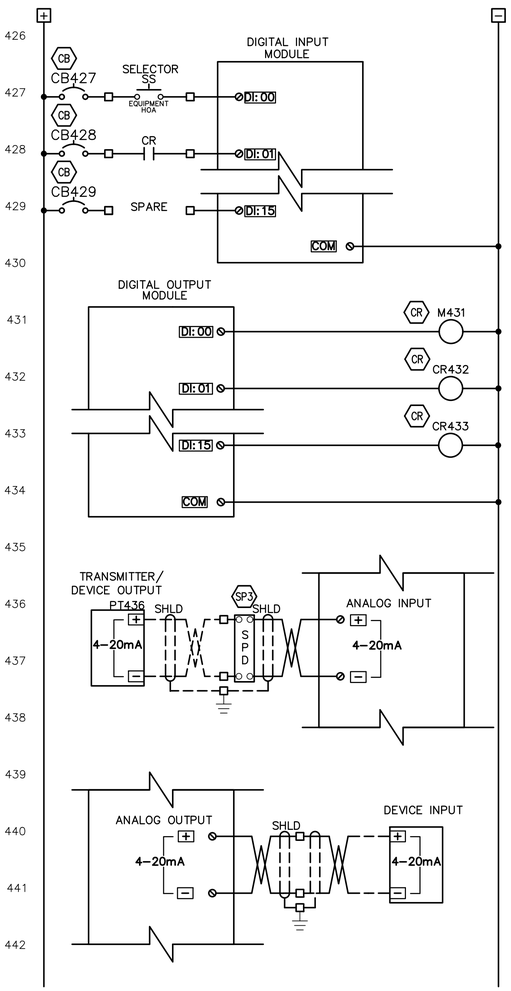


SCADA PANEL TYPICAL PLC I/O DIAGRAM
NOT TO SCALE

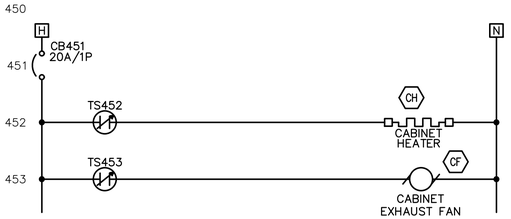


SCADA PANEL CABINET
HEATER & FAN CONTROL DIAGRAM
NOT TO SCALE

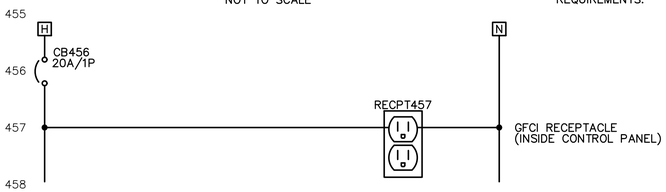


SCADA PANEL CABINET
RECEPTACLE DIAGRAM
NOT TO SCALE

NOTES:

1. DIAGRAMS ON THIS SHEET ARE TYPICAL FOR THE FOLLOWING SCADA PANELS:
   - A. CITY YARD GROUND STORAGE TANKS
   - B. CITY YARD CHLORINE BUILDING
   - C. STANDPIPES TANK SITE
   - D. NORTH BLENDING TANK
   - E. SOUTH BLENDING TANK
   - F. WARD TANK SITE
   - G. WARD BOOSTER PUMP STATION
   - H. EAST ELEVATED STORAGE TANK
   - I. SOUTH ELEVATED STORAGE TANK
   - J. WEST ELEVATED STORAGE TANK
   - K. AIRPORT ELEVATED STORAGE TANK
2. REFER TO I/O LISTS FOR EACH OF THE PANELS FOR I/O REQUIREMENTS.


BAIRD GILROY & DIXON
ELECTRICAL ENGINEERS
9711 S. Mason Rd.
Ste. 125, #326
Richmond, TX 77407
(281) 529-5005
www.bgdeng.com
TBPE No. F-16575
Job No. 115-0030


| NO. | REVISION | DATE |
|---|---|---|
| | | |

JOHN W. GILROY, JR. 112871 LICENSED PROFESSIONAL ENGINEER STATE OF TEXAS
7/6/20


ENPROTEC/HIBBS & TODD, INC.
ENVIRONMENTAL AND CIVIL ENGINEERING
402 Cedar Street
325-698-5560
Abilene, Texas 79601
PE Firm Registration No. 1151
PG Firm Registration No. 50103
RPLS Firm Registration No. 10011900


BAR IS ONE INCH ON ORIGINAL DRAWING
0 1
IF NOT ONE INCH ON THIS SHEET, ADJUST SCALES ACCORDINGLY.

| | |
|---|---|
| DESIGNED BY JWG | SCALE AS NOTED |
| DRAWN BY JWG | DATE 7/6/2020 |
| CHECKED BY JAD | |

TOWN OF PECOS CITY TEXAS
SCADA IMPROVEMENTS

# TYPICAL SCADA PANEL CONTROL DIAGRAM

PROJECT NO.: 19-7469
SEQUENCE No. 25 OF 28
SHEET No. E20

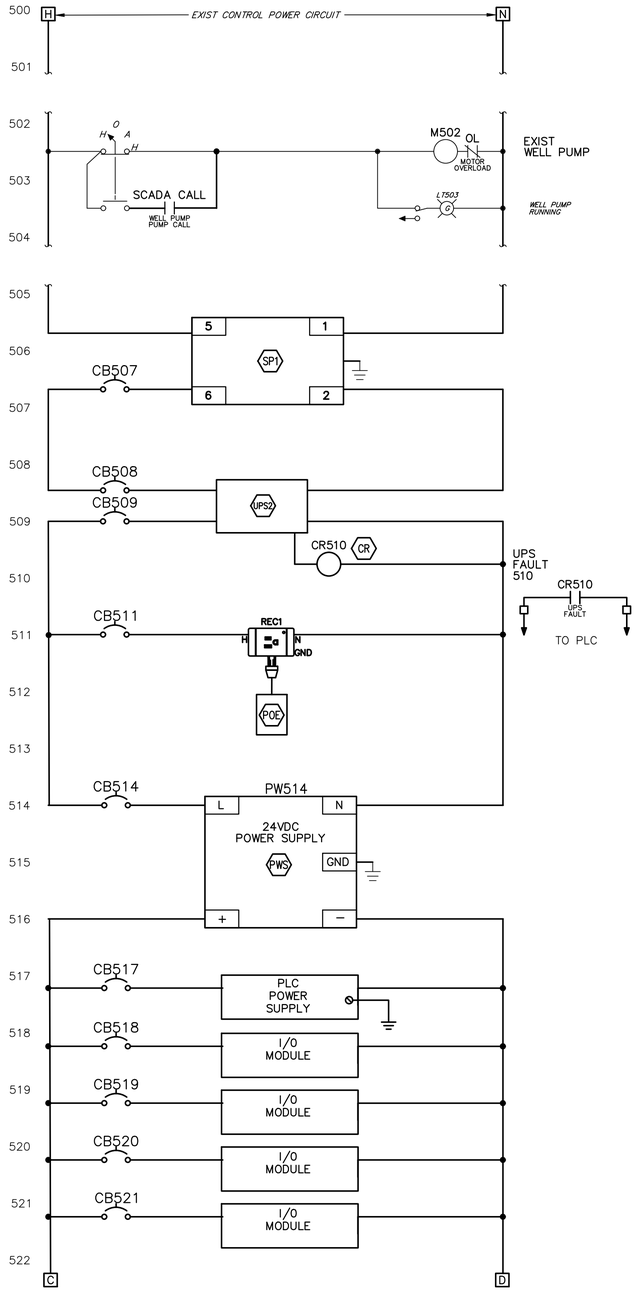


TYPICAL WELL PUMP CONTROL PANEL
PLC POWER SUPPLY DIAGRAM MODIFICATIONS
NOT TO SCALE

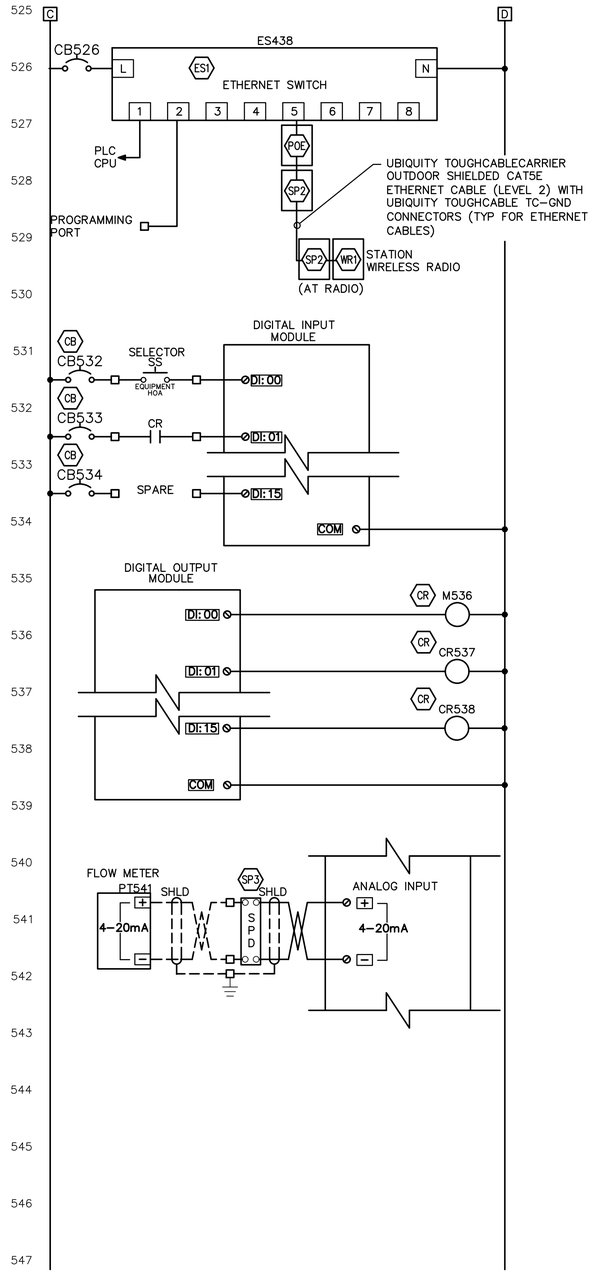


WELL PUMP CONTROL PANEL
TYPICAL PLC I/O DIAGRAM
NOT TO SCALE

NOTES:

1. EXIST WELL PUMP CONTROL PANEL DIAGRAMS ARE TYPICAL. VERIFY ACTUAL PANEL CONFIGURATION FOR EACH SITE AND ADJUST AS NECESSARY TO INSTALL PROPOSED EQUIPMENT.


BAIRD GILROY & DIXON
ELECTRICAL ENGINEERS
9711 S. Mason Rd.
Ste. 125, #326
Richmond, TX 77407
(281) 529-5005
www.bgdeng.com
TBPE No. F-16575
Job No. 115-0030


| NO. | REVISION | DATE |
|---|---|---|
| | | |

7/6/20

STATE OF TEXAS
JOHN W. GILROY, JR.
112871
LICENSED
PROFESSIONAL ENGINEER


ENPROTEC/HIBBS & TODD, INC.
ENVIRONMENTAL AND CIVIL ENGINEERING
402 Cedar Street
325-698-5560
Abilene, Texas 79601
PE Firm Registration No. 1151
PG Firm Registration No. 50103
RPLS Firm Registration No. 10011900


BAR IS ONE INCH ON ORIGINAL DRAWING
0 1
IF NOT ONE INCH ON THIS SHEET, ADJUST SCALES ACCORDINGLY.

| | |
|---|---|
| DESIGNED BY JWG | SCALE AS NOTED |
| DRAWN BY JWG | DATE 7/6/2020 |
| CHECKED BY JAD | |

TOWN OF PECOS CITY TEXAS
SCADA IMPROVEMENTS

# TYPICAL WELL CONTROL PANEL MODIFICATIONS CONTROL DIAGRAM

PROJECT NO.: 19-7469
SEQUENCE No. 26 OF 28
SHEET No. E21

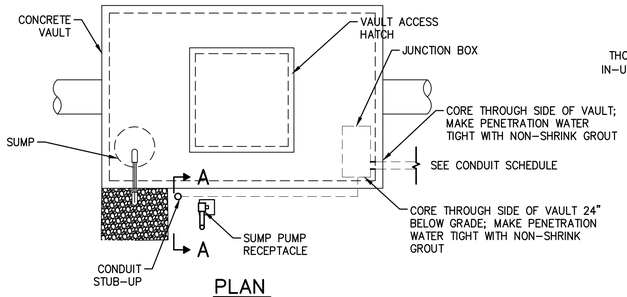


PLAN

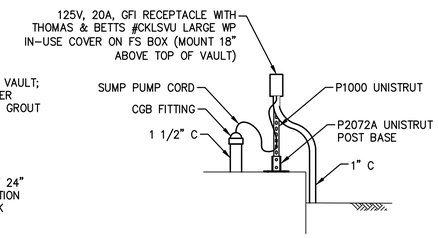


SECTION A–A

## VAULT SUMP PUMP DETAIL

NOT TO SCALE

ADD THE FOLLOWING NAMEPLATE WITH RED BACK GROUND AND WHITE LETTERS "WARNING: GST LOW LEVEL LOCKOUT NOT ACTIVE ON BACKUP CONTROL"

NOTE:

PROVIDE NAMEPLATES FOR EACH CONTROL PANEL PER CONTROL DIAGRAM SHEETS. NAMEPLATES SHALL BE CONSTRUCTED FROM LAMINATED PLASTIC MATERIAL A MINIMUM OF 1/16" THICK. LETTERS SHALL BE GOTHIC 3/16" HIGH MINIMUM, USE TWO LINES IF DESCRIPTION WILL CAUSE LENGTH TO EXCEED 2 1/2". ALARM NAMEPLATES SHALL BE WHITE LETTERS ON BLACK BACKGROUND. AFFIX NAMEPLATES TO PANEL USING SELF-TAPPING STAINLESS STEEL SCREWS. SUBMIT DETAILS WITH SHOP DRAWINGS.

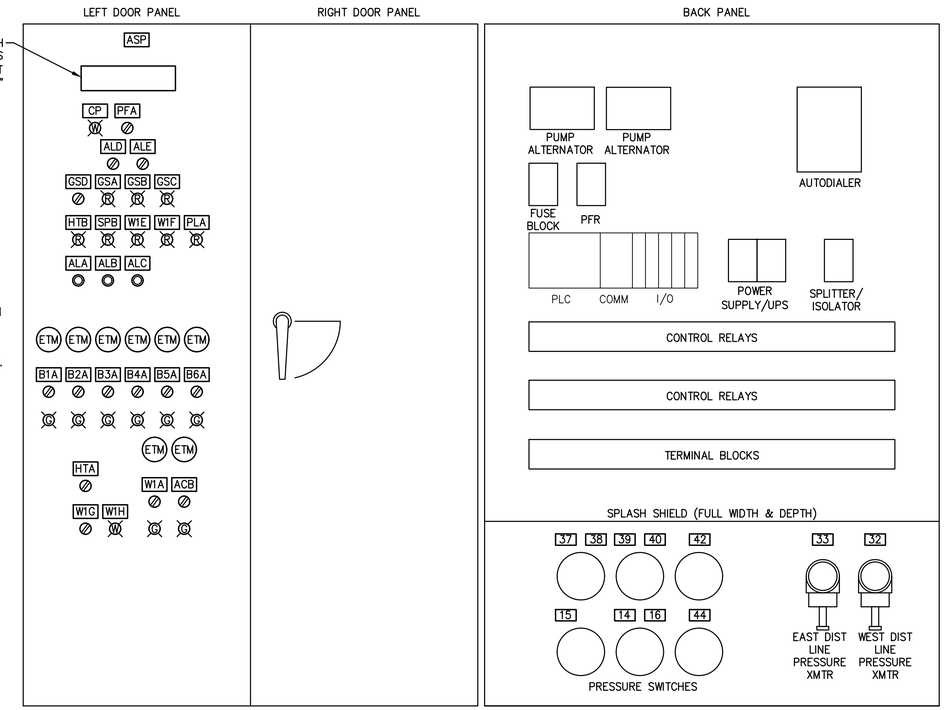


## HSP CONTROL PANEL DETAIL

NOT TO SCALE

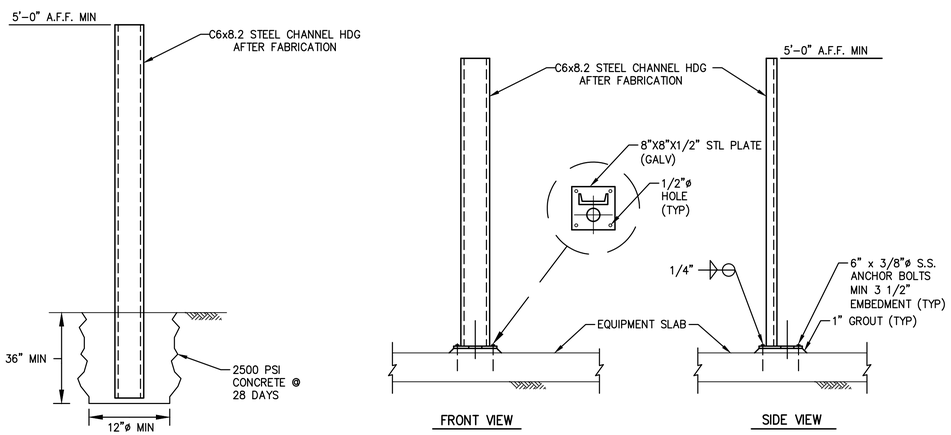


## DEVICE MOUNTING POST DETAIL

NOT TO SCALE

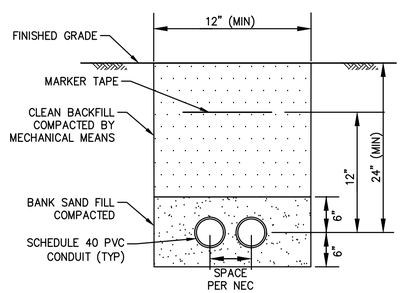


## UNDERGROUND CONDUIT CONSTRUCTION

NOT TO SCALE

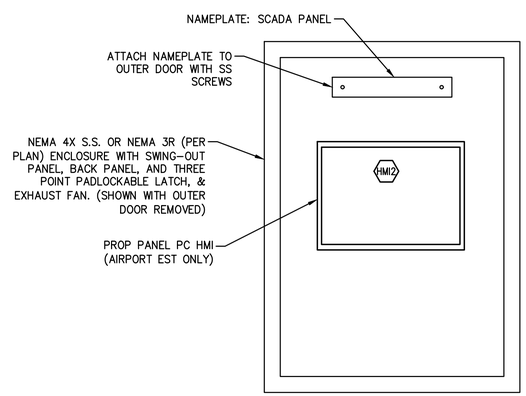


## SCADA CONTROL PANEL LAYOUT

NOT TO SCALE

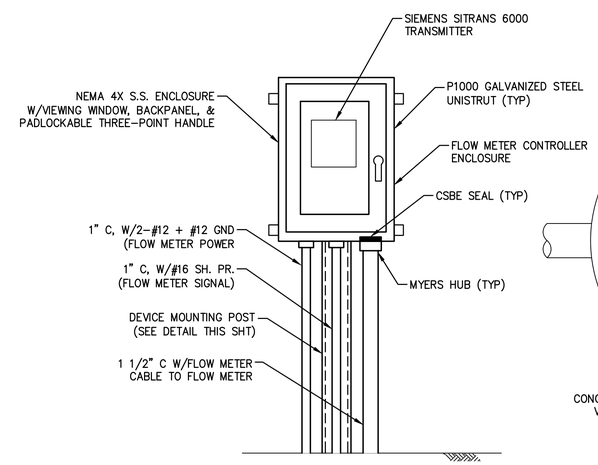


## FLOW METER CONTROLLER DETAIL

NOT TO SCALE

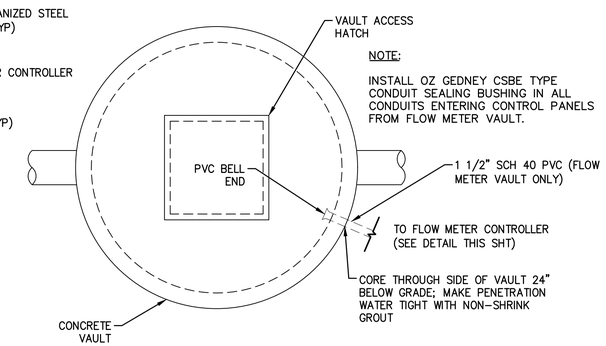


NOTE:

INSTALL OZ GEDNEY CSBE TYPE CONDUIT SEALING BUSHING IN ALL CONDUITS ENTERING CONTROL PANELS FROM FLOW METER VAULT.

## FLOW METER VAULT DETAIL

NOT TO SCALE


BAIRD GILROY & DIXON ELECTRICAL ENGINEERS
9711 S. Mason Rd. Ste. 125, #326 Richmond, TX 77407 (281) 529-5005 www.bgdeng.com TBPE No. F-16575 Job No. 115-0030


| NO. | REVISION | DATE |
|---|---|---|
| | | |

7/6/20

STATE OF TEXAS — JOHN W. GILROY, JR. — 112871 — LICENSED PROFESSIONAL ENGINEER


ENPROTEC/HIBBS & TODD, INC.
ENVIRONMENTAL AND CIVIL ENGINEERING
402 Cedar Street Abilene, Texas 79601
325-698-5560
PE Firm Registration No. 1151
PG Firm Registration No. 50103
RPLS Firm Registration No. 10011900


BAR IS ONE INCH ON ORIGINAL DRAWING (0 – 1)
IF NOT ONE INCH ON THIS SHEET, ADJUST SCALES ACCORDINGLY.

| DESIGNED BY | SCALE |
|---|---|
| JWG | AS NOTED |
| DRAWN BY JWG | DATE |
| CHECKED BY JAD | 7/3/2020 |

**TOWN OF PECOS CITY TEXAS**
**SCADA IMPROVEMENTS**

**ELECTRICAL DETAILS SHEET 1**

PROJECT NO.: **19-7469**
SEQUENCE No. **27 OF 28**
SHEET No. **E22**

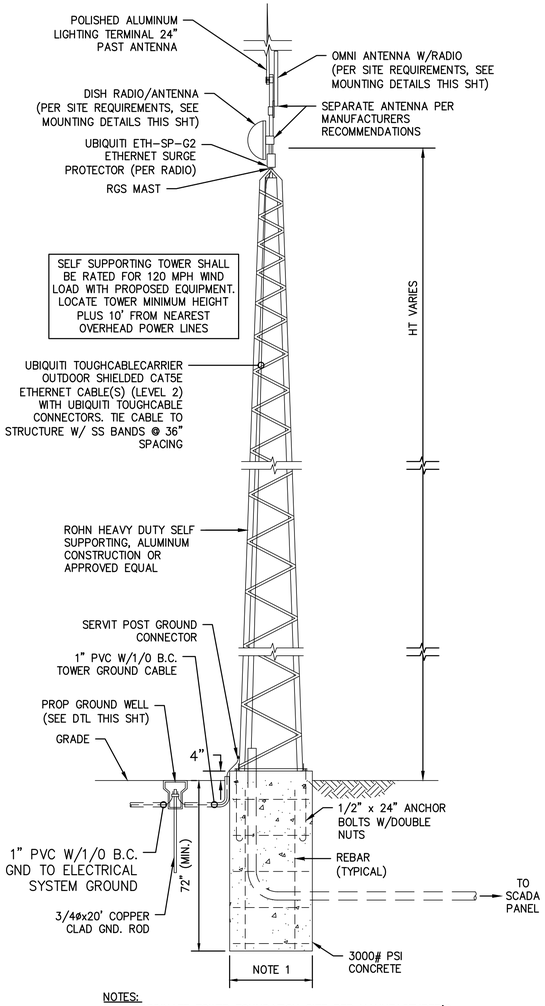


NOTES:

1. COORDINATE TOWER FOUNDATION SIZE PER MANUFACTURER'S RECOMMENDATIONS.
2. ORIENT LOCATION OF TOWER BASE TO ALLOW HORIZONTAL TILTING FOR ANTENNA ACCESS.
3. PROVIDE A FULL HEIGHT GROUNDING KIT WITH ANTENNA TOWER.
4. PROVIDE ALL NECESSARY HARDWARE FOR MOUNTING ANTENNA TO TOWER PER MANUFACTURER REQUIREMENTS AND BEST PRACTICES.

## RADIO ANTENNA TOWER DETAIL

NOT TO SCALE (SEE NOTE 2 & 3)

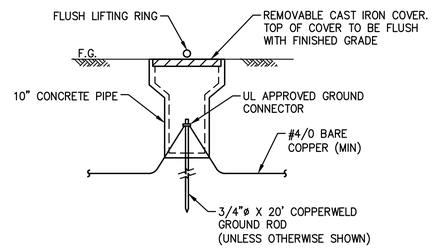


## GROUND WELL DETAIL

NOT TO SCALE

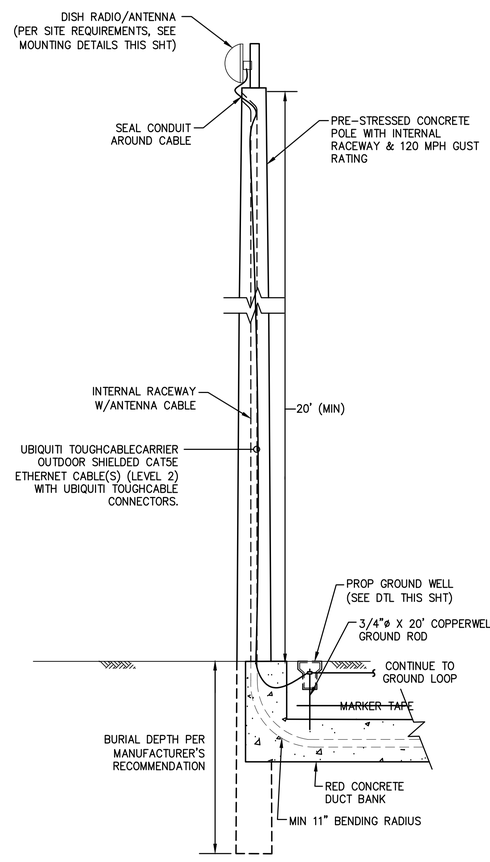


## ANTENNA POLE DETAIL

NOT TO SCALE

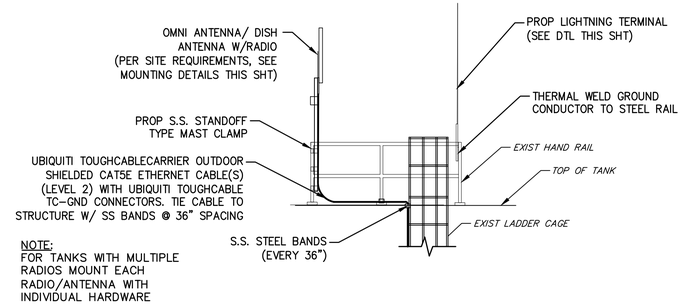


NOTE:
FOR TANKS WITH MULTIPLE RADIOS MOUNT EACH RADIO/ANTENNA WITH INDIVIDUAL HARDWARE

## TANK ANTENNA MOUNTING

NOT TO SCALE

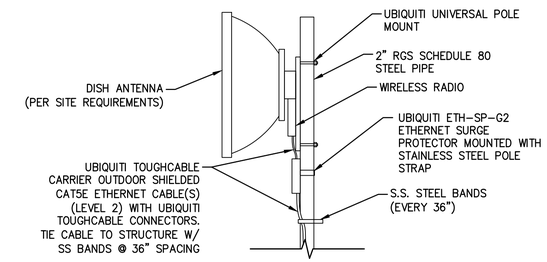


## DISH ANTENNA RADIO MOUNTING

NOT TO SCALE

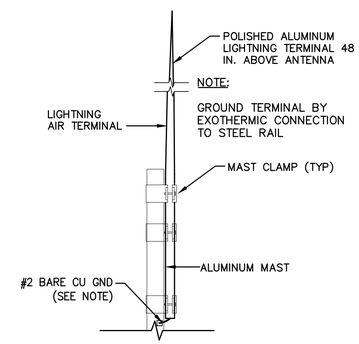


NOTE:
GROUND TERMINAL BY EXOTHERMIC CONNECTION TO STEEL RAIL

## LIGHTNING TERMINAL DETAIL

NOT TO SCALE

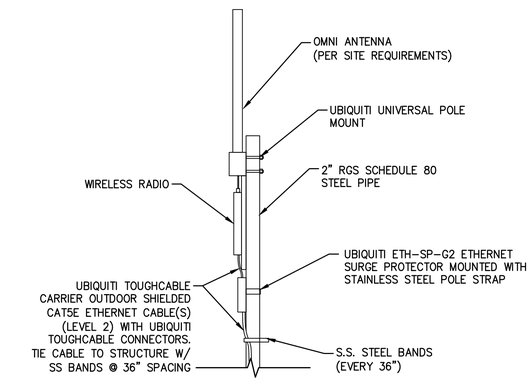


## OMNI ANTENNA RADIO MOUNTING

NOT TO SCALE

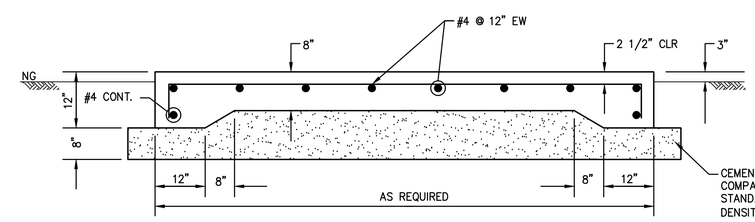


NOTE:
SLAB SIZE TO BE ADJUSTED TO ACCOMMODATE SUBMITTED EQUIPMENT

SUBGRADE NOTES:

1. PRIOR TO PLACING OF CONCRETE PAD, OR BEFORE ANY FILL IS PLACED, ALL TRACES OF ORGANIC, LOOSE OR OBVIOUSLY COMPRESSIBLE MATERIAL MUST BE REMOVED. TREE ROOTS GREATER THAN 0.5 INCHES SHOULD BE ALSO REMOVED. THE SUBGRADE SHOULD BE PROOF ROLLED UNTIL THE GRADE OFFERS A RELATIVELY UNYIELDING SURFACE AND THE SPECIFIED DEGREE OF COMPACTION HAS BEEN ACHIEVED. AREAS OF EXCESSIVE YIELDING SHOULD BE EXCAVATED AND BACKFILLED WITH A CLEAN COMPACTED SOIL. SPECIFIED COMPACTION: NINETY-FIVE PERCENT (95%) OF MAXIMUM DRY DENSITY AS DETERMINED BY THE STANDARD PROCTOR TEST (ASTM D-698).
2. ANY ADDITIONAL MATERIAL USED TO INCREASE THE ELEVATION OF THE SITE SHOULD BE RELATIVELY NONEXPANSIVE SANDY CLAY MATERIAL WITH A LIQUID LIMIT OF 28 OR MORE, PLASTICITY INDEX IN THE RANGE OF 10 TO 20, AND SHOULD BE PLACED IN LAYERS OF NOT MORE THAN EIGHT (8) INCHES IN THICKNESS, AT MOISTURE CONTENTS AT OR ABOVE OPTIMUM, AND COMPACTED TO DENSITIES OF AT LEAST NINETY-FIVE PERCENT (95%) OF STANDARD PROCTOR DENSITY ASTM D-698.

STRUCTURAL NOTES:

1. ALL CONCRETE SHALL TEST 3,000 PSI AT 28 DAYS.
2. ALL CONCRETE REINFORCING BARS SHALL CONFORM TO ASTM A615 GRADE 60.
3. DETAILING AND FABRICATION OF CONCRETE REINFORCEMENT AND ACCESSORIES SHALL BE IN ACCORDANCE WITH ACI-315 LATEST EDITION.
4. LAP ALL CONTINUOUS REINFORCING BARS 36 DIAMETERS AT SPLICES, TEES, AND CORNERS.
5. THE USE OF HEAT TO FACILITATE THE BENDING OF REINFORCING BARS WILL NOT BE PERMITTED.
6. NO ENGINEERING DRAWING MAY BE REPRODUCED FOR USE AS SHOP DRAWINGS.

## ELECTRICAL EQUIPMENT SLAB DETAIL

NOT TO SCALE


BAIRD GILROY & DIXON
ELECTRICAL ENGINEERS
9711 S. Mason Rd.
Ste. 125, #326
Richmond, TX 77407
(281) 529-5005
www.bgdeng.com
TBPE No. F-16575
Job No. 115-0030


| NO. | REVISION | DATE |
|---|---|---|
| | | |

7/6/20

STATE OF TEXAS — JOHN W. GILROY, JR. — 112871 — LICENSED PROFESSIONAL ENGINEER


ENPROTEC/HIBBS & TODD, INC.
ENVIRONMENTAL AND CIVIL ENGINEERING
402 Cedar Street
325-698-5560
Abilene, Texas 79601
PE Firm Registration No. 1151
PG Firm Registration No. 50103
RPLS Firm Registration No. 10011900


BAR IS ONE INCH ON ORIGINAL DRAWING
0 1
IF NOT ONE INCH ON THIS SHEET, ADJUST SCALES ACCORDINGLY.

| DESIGNED BY | SCALE |
|---|---|
| JWG | AS NOTED |
| DRAWN BY JWG | DATE 7/3/2020 |
| CHECKED BY JAD | |

**TOWN OF PECOS CITY TEXAS**
**SCADA IMPROVEMENTS**

**ELECTRICAL DETAILS SHEET 2**

PROJECT NO.: 19-7469
SEQUENCE No. 28 OF 28
SHEET No. E23